Installation and Servicing Instructions

Alpha Pro Tec Plus 50, 70, 90 and 115

Wall Mounted, Fan Assisted, Gas Fired, High Efficiency Condensing System Boilers

For Technical help or for Service call ...

ALPHA HELPLINE

Tel: 0870 3001964

Alpha

HEATING INNOVATION

Nepicar House, London Road,
Wrotham Heath, Sevenoaks,
Kent TN15 7RS

CE 0051

benchmark COLLECTIVE MARK

THE MARK OF QUALITY FOR THE INSTALLATION, COMMISSIONING AND SERVICING OF DOMESTIC HEATING AND HOT WATER SYSTEMS

Set for use with Natural Gas

Leave these instructions with the User

BENCHMARK SCHEME

To comply with Building Regulations Part L1 (Part 6 in Scotland) the boiler should be installed in accordance with the manufacturer's instructions. Self-certification that the boiler has been installed to comply with Building Regulations can be demonstrated by completing and signing the Benchmark Checklist at the back of these instructions

Code of Practice

For the installation, commissioning and servicing of domestic heating and hot water products.

Benchmark places responsibilities on both manufacturers and installers*. The purpose is to ensure that customers** are provided with the correct equipment for their needs, that it is installed, commissioned and serviced in accordance with the manufacturer's instructions by competent persons and that it meets the requirements of the appropriate Building Regulations. Installers are required to carry out work in accordance with the following:

Standards of Work

- Be competent and qualified to undertake the work required.
- Install, commission, service and use products in accordance with the manufacturer's instructions provided.
- Ensure that where there is responsibility for design work, the installation is correctly sized and fit for purpose.
- Meet the requirements of the appropriate Building Regulations. Where this involves notifiable work be a member of a Competent Persons Scheme or confirm that the customer has notified Local Authority Control (LABC), prior to work commencing.
- Complete all relevant sections of the Benchmark Checklist/Service Record when carrying out commissioning or servicing of a product or system.
- Ensure that the product or system is left in a safe condition and, where possible, in good working order.
- Highlight to the customer any remedial or improvement work identified during the course of commissioning or servicing work.
- Refer to the manufacturer's helpline where assistance is needed.
- Report product faults and concerns to the manufacturer in a timely manner.

Customer Service

- Show the customer any identity card that is relevant to the work being carried out prior to commencement or on request.
- Give a full and clear explanation/demonstration of the product or system and its operation to the customer.
- Hand over the manufacturer's instructions, including the Benchmark Checklist, to the customer on completion of an installation.
- Obtain the customer's signature on the Benchmark Checklist to confirm satisfactory demonstration and receipt of manufacturer's instructions.
- Advise the customer that regular product servicing is needed, in line with manufacturers' recommendations, to ensure that safety and efficiency is maintained.
- Respond promptly to calls from a customer following completion of their work, providing advice and assistance by phone and, if necessary, visiting the customer.
- Rectify any installation problems at no cost to the customer during the installer's guarantee period.

* The use of the word "installer" is not limited to installation itself and covers those carrying out installation, commissioning and/or servicing of heating and hot water products, or the use of supporting products (such as water treatment or test equipment).

** Customer includes householders, landlords and tenants.

Benchmark Commissioning and Servicing Section

It is a requirement that the boiler is installed and commissioned to the manufacturers instructions and the data fields on the commissioning checklist completed in full.

To instigate the boiler guarantee the boiler needs to be registered with the manufacturer within one month of the installation.

To maintain the boiler guarantee it is essential that the boiler is serviced annually by a Gas Safe registered engineer who has been trained on the boiler installed. The service details should be recorded on the Benchmark Service Interval Record and left with the householder.

www.centralheating.co.uk

benchmark
COLLECTIVE MARK
THE MARK OF QUALITY FOR THE INSTALLATION, COMMISSIONING AND SERVICING OF DOMESTIC HEATING AND HOT WATER SYSTEMS

Useful contact details: **Gas Safe Register** - 0800 408 5577 - www.gassaferegister.co.uk

Alpha Heating Innovation: General Sales Enquiries - 0844 871 8760
Technical Helpline - 0844 871 8764

CONTENTS

1 Introduction....3
2 General data....4
3 General boiler information....11
4 Installation....17
5 Commissioning and using the boiler....23
6 Routine servicing....28
7 Wiring diagram....33
8 Fault finding....34
9 Programming the boiler PCB....36
10 Performance data....38
11 Cascade system installation....42
12 Short parts llist....43
13 Energy classification....44
Benchmark Checklist....52
Service record....53

1 INTRODUCTION

The Alpha Pro Tec Plus range are wall mounted high efficiency condensing, fan assisted system boilers. The burner is lit electronically and the heat output is controlled by a modulating fan and gas valve.

These are system boilers providing heating only for sealed central heating systems. However, they may be used with an open central heating system if required - refer to Section 3.8.

The boilers are supplied with type B23 flue configuration (open chamber and forced draught) but can be changed to type C (room sealed) by using a kit.

The boilers are fitted with a pump, 4 bar safety valve and pressure gauge fully assembled and tested. They are designed for use with a fully pumped, sealed and pressurised central heating system. If used with an open system refer to Section 3.8. The boilers can be supplied for use with Natural gas or Propane Gas (LPG).

Note: There are a number of additional controls and accessories available for use with the boilers to enable cascade and zone installations to be used - See Section 11. Further information is available from Alpha Therm Ltd.

IMPORTANT

It is the law that all gas appliances are installed by a competent person, ie Gas Safe registered personnel, in accordance with the following recommendations:-

Current Gas Safety (Installation and Use) Regulations

All current Building Regulations issued by the Department of the Environment, i.e. Approved Document L26.

Building Standards (Scotland) (Consolidation) Regulations issued by the Scottish Development Department

UK Water Regulations/Byelaws (Scotland)

Health & Safety Document No. 635 (The Electricity At Work Regulations 1989)

The installation should also be in accordance with the following British Standard Codes of Practice:-

BS 5440-1: 2008.....Flueing and Ventilation Requirements
BS 5440-2: 2009.....Installation and Maintenance of Flues and Ventilation
BS 5546: 2010.....Specification for Water Heating Appliances
BS 6644: 2011.....Specification for Installation gas fired boilers 70 kW – 1.8 MW
BS 6798: 2009.....Specification for Installation gas fired boilers up to 70 kW
BS 6891: 2005 + A2: 2008.....Installation of low pressure Gas Pipework
IGEM/UP/2 .....Installation of pipework
IGEM/UP/4 .....Commissioning of gas fired plant
IGE/UP/10 .....Installation of Flued gas appliances
IGEM/UP/16 .....Design for natural gas installations
IGE/UP/1 and 1A.....Strength Testing and tightness testing Natural Gas Installations

Reference should also be made to any other standards and requirements relating to the installation depending on the location and use.

Reference should be made to DEFRA document 'Guide to condensing boiler installation assessment procedures for dwellings'.

If installation is in a timber framed building, refer to the Institute of Gas Engineers document IGE/UP/7.

This appliance meets the requirements of IPX5D, ie degree of protection against moisture.

This appliance contains no asbestos and no substances have been used in the construction process that contravene the COSHH Regulations (Control of Substances Hazardous to Health).

Failure to install this appliance correctly could lead to prosecution. It is in your own interest and that of safety to ensure that the law is complied with.

Manufacturer's instructions must **NOT** be taken in anyway as over-riding statutory obligations.

Notes: 1. Ensure that the Benchmark Checklist has been completed after the boiler has been installed and commissioned.
2. It is the law that all domestic boiler installations are registered by the installer through the Gas Safe Notification Scheme.

Propane Gas (LPG) - In addition to the regulations and requirements stated, the boiler **must be** installed in accordance with BS 5482:1 - The Installation of Propane Burning Appliances in Permanent Dwellings.

2 GENERAL DATA

2.1 TECHNICAL DATA

Model	Pro Tec Plus	50	70	90	115
Heat output condensing (50/30°C)	kW	54.8	74.5	98.8	121.7
Heat output non condensing (80/60°C)	kW	49.9	68.0	90.0	111.0
Heat output minimum	kW	5.0	7.2	9.4	11.0
NOx	Class	5	5	5	5
Maximum CO/CO_2	Ratio	0.003	0.003	0.003	0.003
Maximum CO	ppm	200	200	200	200
SAP/SEDBUK seasonality efficiency 2005	%	90.0	90.0	90.1	90.0
SAP/SEDBUK seasonality efficiency 2009	%	88.5	88.6	88.7	88.5
Effieciency at maximum output 60ºC/80ºC	%	97.3	97.3	97.5	97.3
Effieciency at maximum output 30ºC/50ºC	%	106.8	106.6	107.0	106.7
Effieciency at part load 30ºC/50ºC	%	107.0	107.2	107.8	107.6
Effieciency at part load 30ºC/40ºC	%	107.0	107.2	107.8	107.6
Maximum system temperature	°C	85	85	85	85
Adjustable system temperature	°C	20 - 85	20 - 85	20 - 85	20 - 85
Maximum primary system pressure	bar	3.5	3.5	3.5	3.5
Minimum primary system pressure	bar	0.5	0.5	0.5	0.5
Recommended system pressure - Cold	bar	1	1	1	1
System safety valve setting	bar	4	4	4	4
Electrical power supply	V ~ 50 Hz	230	230	230	230
Electrical power consumption - Maximum	Watts	155	195	345	385
Electrical power consumption - Standby	Watts	6	5	5	5

2.2 PHYSICAL DATA

Model		Pro Tec Plus	50	70	90	115
Boiler flow and return connections		BSP	1½"	1½"	1½"	1½"
Pressure relief valve connection		BSP	¾"	¾"	¾"	¾"
Gas connection		BSP	28 mm	28 mm	28 mm	28 mm
Boiler dimensions	Height	mm	843	1038	1038	1038
	Width	mm	442	600	600	600
	Depth	mm	457	502	632	632
Clearances for servicing	Bottom	mm	400	400	400	400
	Top (horizontal flue)	mm	300	300	300	300
	Top (vertical flue)	mm	150	150	150	150
	Sides	mm	10	10	10	10
	Front	mm	500	500	500	500
Boiler dry lift weight		kg	51	81	96	103
Boiler operating weight (full of water) approx.		kg	54	85	106	114
Water content		litre	3	4	10	11

2.3 COMBUSTION DATA

Natural Gas G20 (Cat I2H 2H)

Model	Pro Tec Plus	50	70	90	115
Heat input (gross)	kW	56.9	77.6	102.5	126.7
Heat input (net)	kW	51.3	69.9	92.3	114.1
Gas burner injector diameter	mm	8.4	12.7	11.3	16.5
Gas supply pressure	mbar	20	20	20	20
Gas rate at maximum output	m^3/h	5.43	7.4	9.77	12.07
Flue mass flow rate at maximum output	kg/h	81	106	146	178
Flue mass flow rate at minimum output	kg/h	9	13	16	19
Flue temperature (nominal)	°C	53	58	53	56
CO_2 at maximum output (factory set)	%	9.5	9.85	9.45	9.6
CO_2 at minimum output (factory set)	%	9.1	8.85	8.9	9.0
CO (nominal) at 0% O_2	ppm	14	26	11	16
CO weight (nominal)	mg/kWh	15	28	12	18
Dry NOX weighted	mg/kWh	38	25	20	31

Propane G31 (Cat I3P 3P)

Model	Pro Tec Plus	50	70	90	115
Heat input (gross)	kW	55.8	76.0	100.3	124.0
Heat input (net)	kW	51.3	69.9	92.3	114.1
Gas burner injector diameter	mm	6.5	8.5	8.7	9.7
Gas supply pressure	mbar	37	37	37	37
Gas rate at maximum output	l/h	7.7	10.4	13.8	17.0
Flue mass flow rate at maximum output	kg/h	82	112	148	181
Flue mass flow rate at minimum output	kg/h	9	13	16	19
Flue temperature (nominal)	°C	53	57	54	56
CO_2 at maximum output (factory set)	%	10.6	10.6	10.6	10.7
CO_2 at minimum output (factory set)	%	10.1	10.0	10.0	10.3
CO (nominal) at 0% O_2	ppm	184	200	190	225
CO weight (nominal)	mg/kWh	15	28	12	18
Dry NOX weighted	mg/kWh	38	25	20	31

2.4 FLUE DATA

Model		Pro Tec Plus	50	70	90	15
* Max. flue length 80/125 concentric (room sealed)		m	14.5	11	8	5
* Max. flue length 80 single pipe (B23 open flue)		m	30	28	14	8.5
Flue system (optional)	Concentric flue	mm	80/125	80/125	80/125	80/125
	Hole in wall required	mm	127	127	127	127
Flue system (as supplied)	Open flue	mm	80	80	80	80
	Hole in wall required	mm	100	100	100	100

* Maximum Flue Lengths (includes first bend onto boiler flue connection for horizontal installations)

Open flue - Maximum horizontal or vertical flue with single 80 mm dia. according to Table above

90° bend is equivalent to 2.1 m of flue length

45° bend is equivalent to 1.3 m of flue length

Vertical terminal is equivalent to 2 m of flue length

Concentric flue - Maximum horizontal flue or vertical flue according to Table above

90° bend is equivalent to 1.9 m of flue length

45° bend is equivalent to 1.4 m of flue length

Vertical terminal is equivalent to 2 m of flue length

Notes:
1. Ensure all flues slope downwards towards the boiler by a minimum of 25 to 30 mm per metre of flue.
2. It is recommended that horizontal and vertical flue assemblies should be supported approximately every 1.5 m with access provided to the joints.
3. These dimensions only apply for flue parts supplied by Alpha.

Cascade flue options are also available, please contact Alpha for further details.

2.5 PUMP

The boiler is equipped with a variable speed low power consumption pump.

During the DHW mode, the pump always runs at the maximum speed.

During the CH mode, two different functioning modes of the pump are available, AUTO and FIXED.

AUTO - The pump speed is controlled automatically in order to give a proportional pump head, the pump speed varies based on the heat output supplied by the burner - the greater the heat output the higher the pump speed.

It is possible to adjust the pump speed range in the boiler parameter menu. Parameter A3 adjusts the maximum speed between values 5 to 9 and parameter A4 the minimum between 5 and the maximum setting (A3).

FIXED - If the parameters 'A3' and 'A4' are set to the same value, the pump runs at the constant speed level set.

Note: For correct operation of the boiler, **do not** set values lower than the minimum value indicated above (i.e. lower than 5).

Pump release - After a prolonged period of inactivity, the pump might stick, and it may be necessary to turn the motor shaft using a screwdriver. Take great care during this operation to avoid damage to the motor.

By-pass Regulation (part. 24 Fig. 1-30) - The boiler leaves the factory with the by-pass open.

If necessary, the by-pass can be adjusted to the system requirements from minimum (by-pass closed) to maximum (by-pass open). Adjust using a flat head screwdriver, turn clockwise to open the by-pass, and anticlockwise to close.

For larger systems an additional external pump can be fitted and controlled by the boiler using a relay switch. See Fig. 2.3.

Pro Tec Plus 50

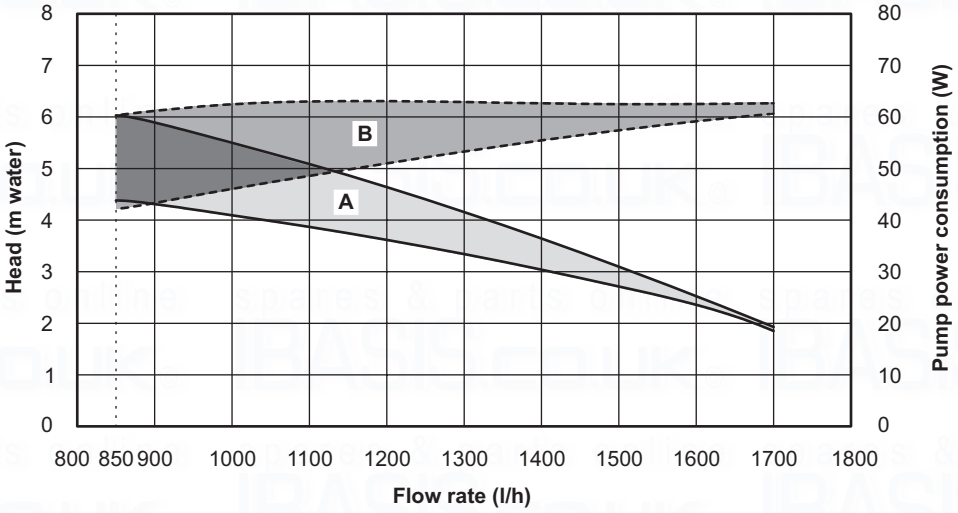

A = Available pump head

B = Pump power com=nsumption (dotted area)

Fig. 2.1

Pro Tec Plus 70, 90

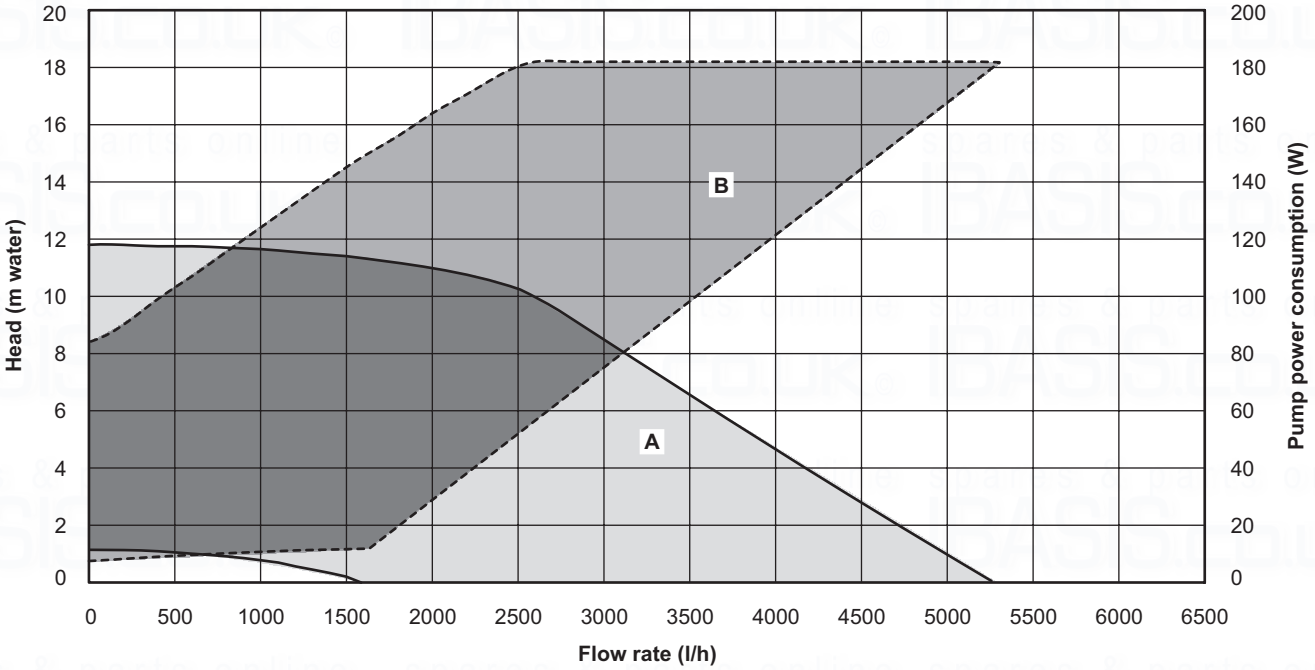

A = Available pump head

B = Pump power com=nsumption (dotted area)

Fig. 2.2

Pro Tec Plus 115

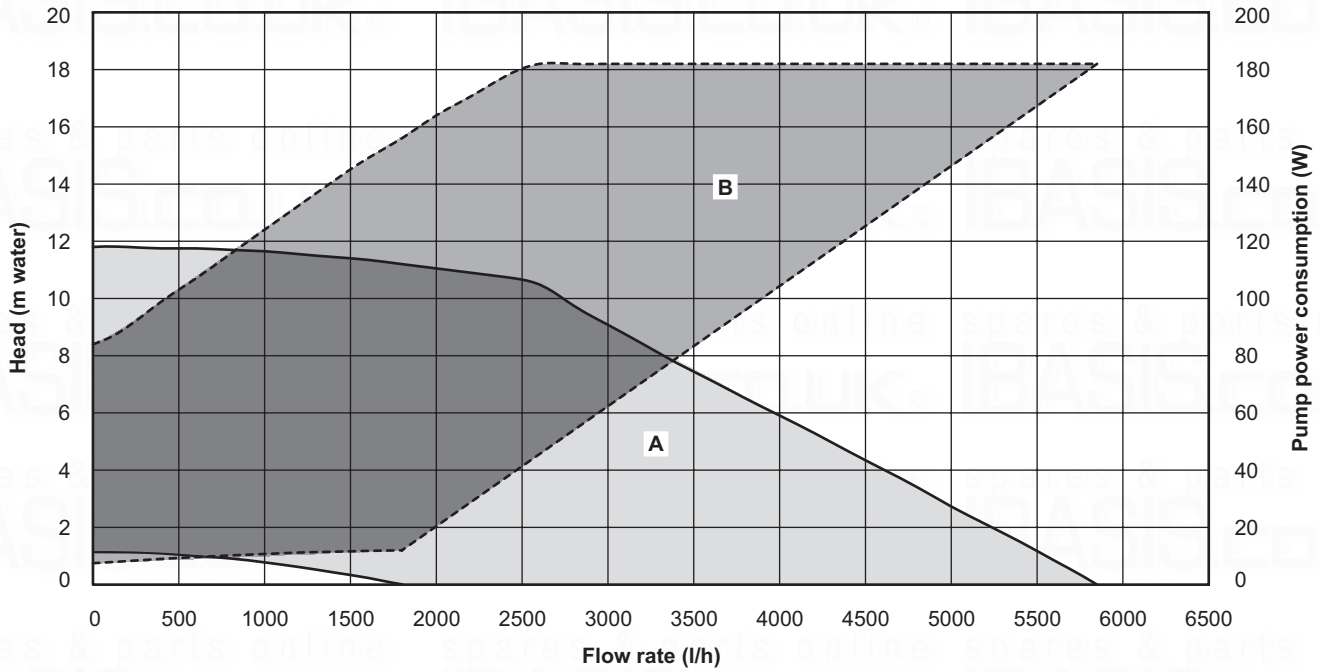

A = Available pump head

B = Pump power com=nsumption (dotted area)

Fig. 2.3

2.6 ELECTRICAL CONNECTIONS

Note: This Appliance Must Be Earthed

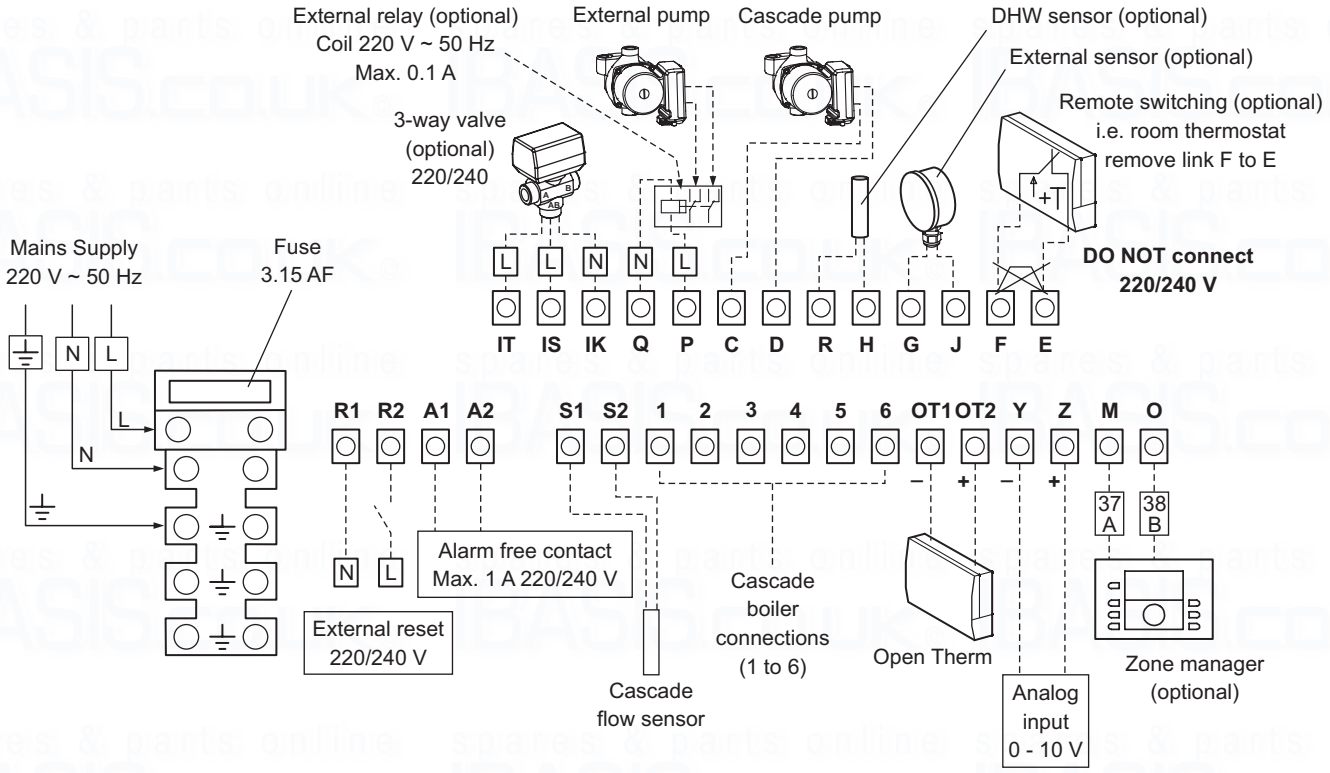

Fig. 2.4

2.7 BOILER SCHEMATIC

Pro Tec Plus 50

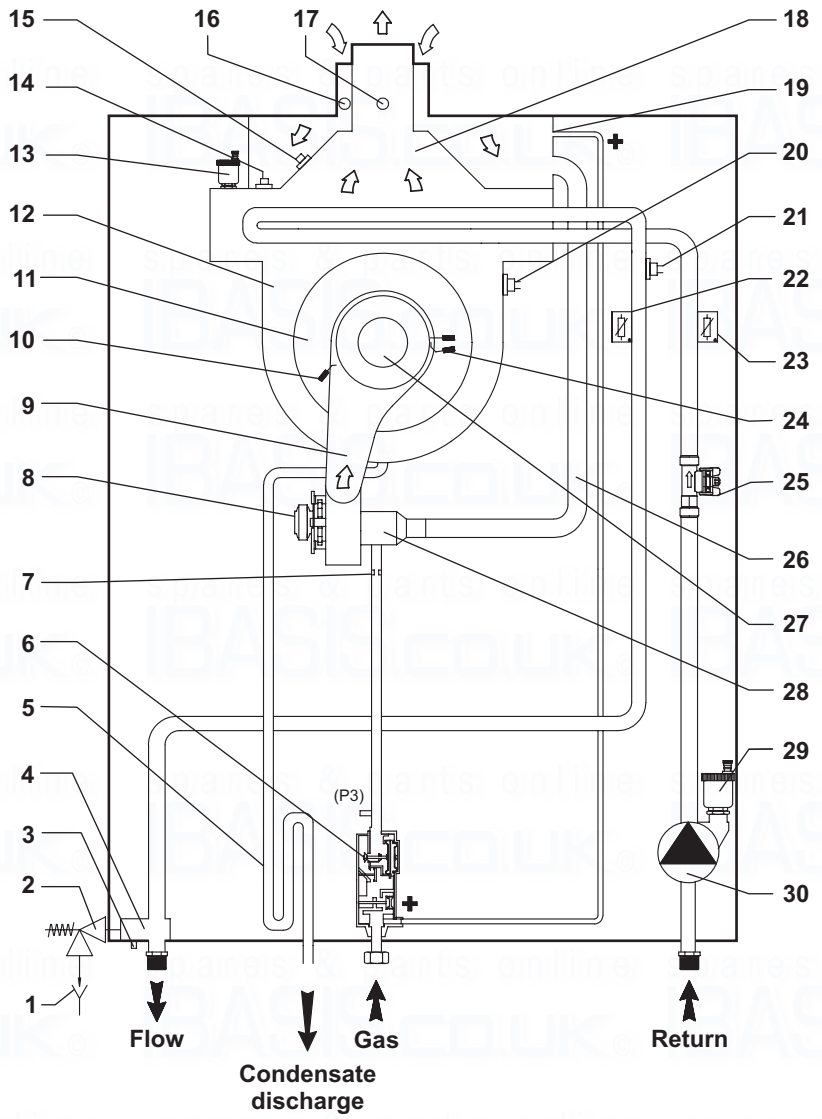

1	Tundish	16	Air sampling point
2	Safety valve (4 bar)	17	Flue sampling point
3	Drain point	18	Flue hood
4	Flow manifold	19	Venturi positive point (P2)
5	Condensate trap	20	Overheat thermostat (manual reset)
6	Gas valve	21	Overheat thermostat
7	Injector	22	Primary flow temperature sensor
8	Fan	23	Primary return temperature sensor
9	Manifold cover	24	Flame sensing electrode
10	Ignition electrode	25	Primary flow sensor
11	Combustion chamber cover	26	Air inlet pipe
12	Heat exchanger	27	Burner
13	Heat exchanger automatic air vent	28	Venturi
14	Flue sensor	29	Automatic air vent
15	Thermofuse	30	Pump

Fig. 2.5

Pro Tec Plus 70, 90, 115

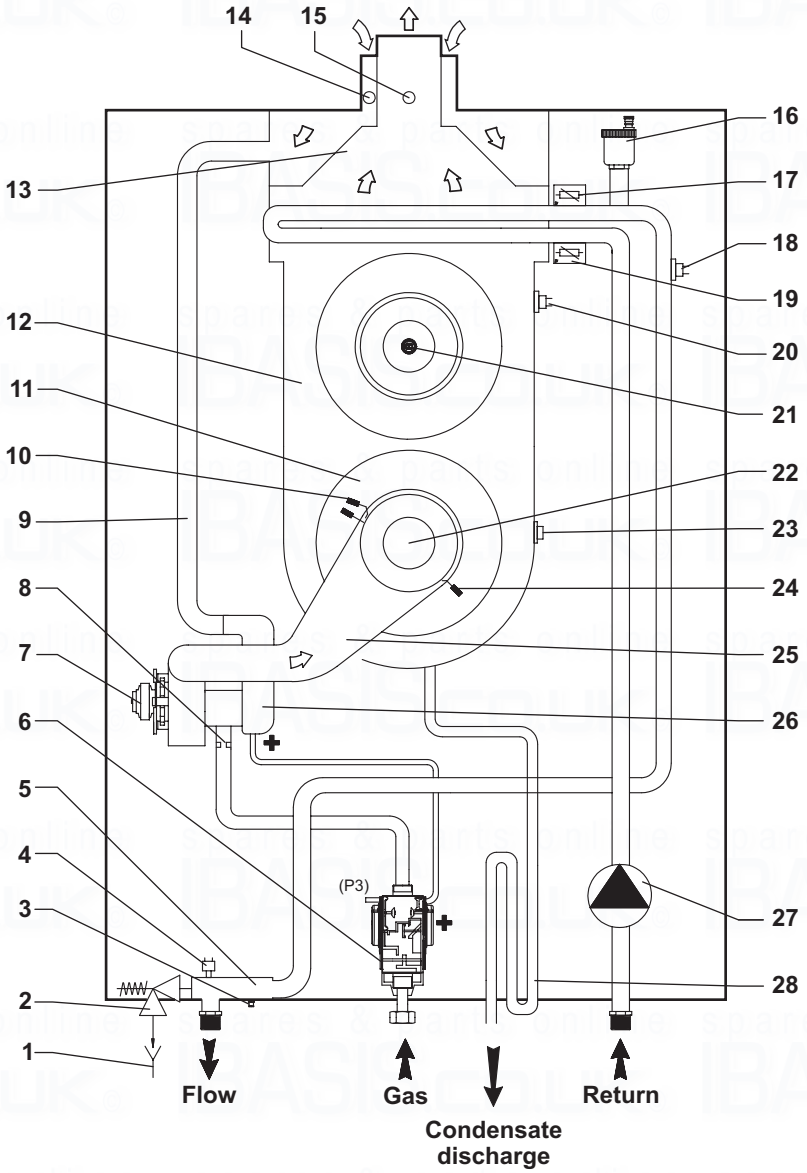

1	Tundish	15	Flue sampling point
2	Safety valve (4 bar)	16	Heat exchanger automatic air vent
3	Drain point	17	Primary flow temperature sensor
4	Primary pressure switch	18	Overheat thermostat
5	Flow manifold	19	Primary return temperature sensor
6	Gas valve	20	Overheat thermostat (manual reset)
7	Fan	21	Flue sensor
8	Injector	22	Burner
9	Air inlet pipe	23	Thermofuse
10	Flame sensing electrode	24	Ignition electrode
11	Combustion chamber cover	25	Manifold cover
12	Heat exchanger	26	Venturi
13	Flue hood	27	Pump
14	Air sampling point	28	Condensate trap

Fig. 2.6

3 GENERAL BOILER INFORMATION

3.1 GAS SUPPLY

Natural Gas:

The meter and supply pipes must be capable of delivering the required quantity of gas in addition to the demand from any other appliances.

The boiler requires at least a 28 mm gas supply pipe and ensure the inlet supply pressure is at least 20 mbar (Natural Gas)

The complete installation, including the meter, must be tested for gas tightness and purged as described in BS 6891 and IGE/UP/1, IGE/UP/1A or IGE/UP1B.

Propane Gas (LPG):

The local Propane Gas supplier should be consulted, at the installation planning stage, in order to establish the availability of an adequate supply of gas, 37 mbar for Propane Gas (LPG).

3.2 ELECTRICAL SUPPLY

The boiler requires a 220/240 V ~ 50 Hz permanent mains supply, fused at 3 A

Note: The boiler must be earthed.

There must only be one common isolator, providing complete electrical isolation, for the boiler and any external controls.

This boiler has been fitted with a supply cable, however, if it is necessary to fit a cable use PVC insulated cable not less than 0.75 mm² (24 x 0.2 mm). The boiler should be connected to a fused three pin plug and unswitched shuttered socket outlet, or a fused double pole switch with a contact separation of at least 3 mm in both poles.

Wiring external to the boiler must be in accordance with the current IEE Wiring Regulations (BS 7671).

3.3 AIR SUPPLY

Open flued (Type B23 flue)

Alpha Pro Tec Plus boilers leave the factory with 'B23' type configuration (open chamber and forced draught - single flue pipe) and receive the air for combustion from openings in the rear of the boiler, therefore air supply for combustion and ventilation must be provided in accordance with BS 5440:2 (for domestic installations with a net input less than 70 kW) or BS 6644 (for commercial installations with a net input over 70 Kw).

Room sealed (Type C flue)

If the boilers are converted to a 'C' type configuration (sealed chamber and forced draught - concentric flue pipe) as described in Section 3.4 only air for ventilation is required.

1. **If the boiler is installed in a room -** No air vents are required in the room in which the boiler is installed.
2. **If the boiler is installed in a cupboard or compartment -** Permanent air vents for ventilation are required in the cupboard or compartment, one at high level and one at low level, either direct to the outside air or to a room. Both the high and low level air vents must communicate with the same room or must be on the same wall to outside air. Both the high and low level vent must each have a free area as per BS 5440:2 or BS 6644.

The minimum clearances for servicing must always be maintained.

3.4 FLUE SYSTEM

The flue system must be installed in accordance with BS 5440:1 or BS 6644.

For horizontal flues ensure the flue assembly slopes downwards towards the boiler by a minimum of 25 - 30 mm per metre of flue.

It is recommended that horizontal and vertical flue assemblies should be supported at least every 1.5 m with access provided to the joints.

Alpha Pro Tec Plus boilers leave the factory with 'B23' type flue configuration (open chamber and forced draught - single flue pipe). To change the configuration to 'C' type (sealed chamber and forced draught - concentric flue pipe), remove the 80 mm dia. adapter, the bracket and gasket from the top of the boiler and fit the concentric flue adaptor, see Sections 4.5 and 4.6.

Note:
1. Under no circumstances must the flue length (including allowances for extra bends) exceed the maximum flue lengths stated for each type of flue.
2. Failure to use the correct Alpha flue components with the boiler will invalidate the boilers CE approval, guarantee and may be unsafe.

Seals for flue elements - If lubrication of components (already performed by the manufacturer) is not sufficient, remove the residual lubricant using a dry cloth, then to ease fitting apply a small amount of common or industrial talc to the seal.

Ensure that the seals are correctly located in the elbows and extensions when assembling the flue.

Note: Do not use silicone or other oil based lubricants on the flue seals.

Flue components are available as follows:-

Open flue - 80 mm dia. single pipe

6.2004200.....Horizontal terminal kit 80 mm dia. (includes 1 metre straight terminal section, one 90° bend and two collars)

6.2004220.....Vertical terminal kit 80 mm dia.

6.2004210.....Extension pipe 1 metre x 80 mm dia.

6.2004290.....90° bend 80 mm dia.

6.2004245.....45° bend 80 mm dia.

6.2004260.....80 mm flue support bracket

6.1000380.....Pitched roof flashing (universal)

6.1000390.....Flat roof flashing (universal)

Concentric flue - 80/125 mm dia.

6.2003205.....Horizontal terminal kit 80/125 mm dia. (includes 1 metre straight terminal section, one 90° bend, two collars and adaptor with square gasket)

6.2003225.....Vertical terminal kit 80/125 mm dia. (includes adaptor with square gasket)

6.2003210.....Extension kit 1 metre x 80/125 mm dia.

6.2003290.....90° bend 80/125 mm dia.

6.2003245.....45° bend 80/125 mm dia.

6.1000380.....Pitched roof flashing (universal)

6.1000390.....Flat roof flashing (universal)

Cascade flue options are also available for multiple boilers.

3.4.1 Horizontal Concentric Flue Options

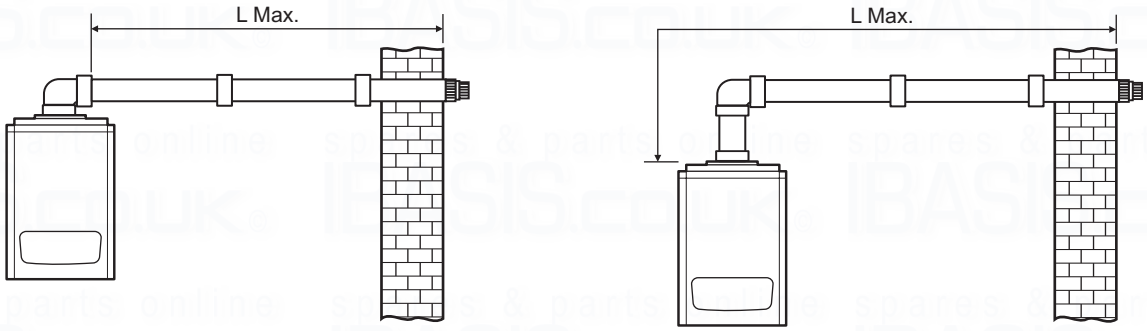

Open flue: 80 mm dia. single pipe
90° bend is equivalent to 2.1 m of flue length
45° bend is equivalent to 1.3 m of flue length

Concentric flue: 80/125 mm dia.
90° bend is equivalent to 1.9 m of flue length
45° bend is equivalent to 1.4 m of flue length

	L Max.			
Pro Tec Plus model	50	70	90	115
80/125 mm Concentric flue	14.5 m	11 m	8 m	5 m
80 mm Open flue	30 m	28 m	14 m	8.5 m

Fig. 3.1

3.4.2 Vertical Concentric Flue Options

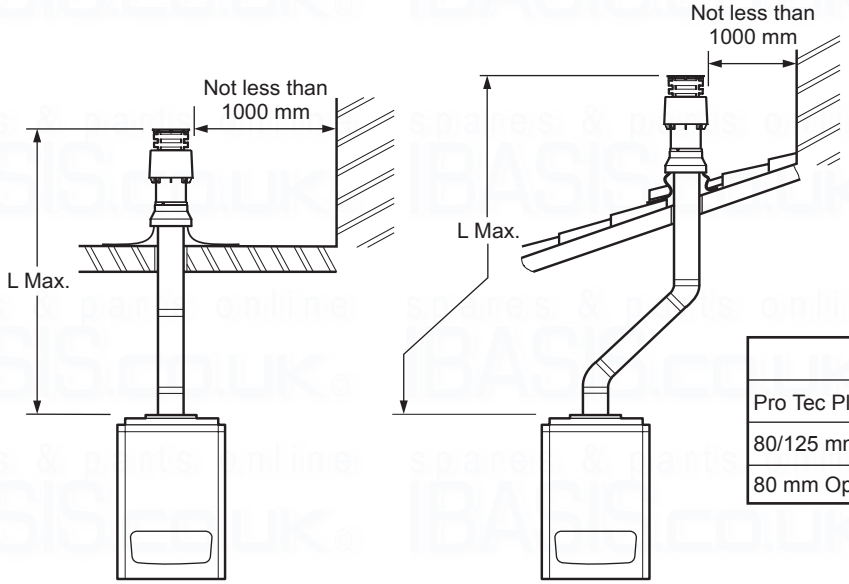

	L Max.			
Pro Tec Plus model	50	70	90	115
80/125 mm Concentric flue	14.5 m	11 m	8 m	5 m
80 mm Open flue	30 m	28 m	14 m	8.5 m

Fig. 3.2

3.5 FLUE TERMINATION

The Alpha Pro Tec Plus range of boilers can be individually flued using either 80 mm open flue configuration or 80/125 mm concentric flue.

Multiple boilers can be individually flued or cascade flue kits are also available in 100 mm or 200 mm.

When installing these boilers careful planning and consideration for the flue system must be undertaken. All flue systems must conform to the relevant standards depending on the boiler size and configuration.

Refer to BS 6644, BS 5440 or IGE/UP/10 for the correct flue location requirements.

3.6 BOILER LOCATION

The boiler is not suitable for external installation unless it is installed within a purpose designed weatherproof building.

The boiler must be installed on a flat vertical wall which is capable of supporting the weight of the boiler. The boiler can be fitted to or adjacent to a wall comprising of a combustible material without the need for a special thermal insulation barrier.

If the boiler is to be fitted in a timber framed building, it should be fitted in accordance with the Institute of Gas Engineers 'Guide for Gas Installations in Timber Frame Housing', reference IGE/UP/7.

The boiler may be installed in any room or internal space, although particular attention is drawn to the requirements of the current IEE Wiring (BS 7671) Regulations, and in Scotland, the electrical provisions of the Building Regulations applicable in Scotland, with respect to the installation of the boiler in a room or internal space containing a bath or shower. Where a room-sealed boiler is installed in a room containing a bath or shower, it must not be possible for a person using the bath or shower to touch any electrical switch or boiler control utilising mains electricity.

The boiler may be installed in a cupboard or compartment, provided it is correctly designed for that purpose, i.e. complies with the Building Regulations and the requirements of BS 6798 and BS 6644.

Propane Gas (LPG): Installation pipes, cylinders and pressure regulators should be fitted in accordance with BS 5482:1. Bulk tank installation must comply with the requirements of the Home Office code of practice for the storage of liquefied petroleum gas at fixed installations. The boiler **must not** be installed in a room or internal space below ground level, e.g. in a basement or cellar, except where at least one side is open to ground level.

3.7 FROST PROTECTION

The boiler is fitted with a frost thermostat that activates the pump and burner when the system water temperature in the boiler falls below 3°C.

The electrical supply to the boiler must be left on for the thermostat to operate and the selector switch must be set to ON .

3.8 CENTRAL HEATING SYSTEM - Fig. 3.3

The boiler is designed for use in a sealed central heating system in accordance with the requirements of BS 5449 and BS 6798.

The system should be designed to operate with flow temperatures of up to 85°C. When designing the system, the pump head, expansion vessel size, mean radiator temperature, etc. must all be taken into account. Refer to the pump performance graph Section 2.5 for guidelines.

However, if the boiler is to be used with an open central heating system refer to Fig. 3.3 and use a barrier heat exchanger (i.e. separates the boiler primary circuit from the open heating circuit). This will also ensure the boiler heat exchanger is protected from an old/dirty system.

Sealed system volume - An expansion vessel **is not** incorporated into the boiler. An expansion vessel **must be** fitted in the position shown in Fig. 3.3. To check correct operation of the expansion vessel the system pressure should not be more than 3.5 bar when the system is at maximum operating temperature (for further guidance refer to BS 7074:1), For example an 8 litre expansion vessel is suitable for a sealed system of 80 litres.

Expansion vessels should be set to 1 bar before the system is filled.

The boiler is supplied with the following components built in:-

Pressure relief valve - complying with BS 6759 and set to operate at 4 bar. The discharge pipe must be routed clear of the boiler and terminated in such a manner that it can be seen, but cannot cause injury to persons or property.

Pressure gauge - To indicate the system pressure to be maintained.

By-pass - The boiler has no built-in by-pass, therefore a by-pass is required for the system.

Installation on a low temperature heating system.

The boiler can directly feed a low temperature system, varying the maximum delivery temperature of the boiler and setting a value of between 20 and 85°C. To vary the boiler maximum delivery temperature, modify the boiler maximum delivery temperature of parameter No. 02 as described in Section 9.

In this mode it is advisable to include a safety limit thermostat set at 55°C in series with the boiler controls. The thermostat must be positioned in the system flow pipe at more than 2 metres from the boiler.

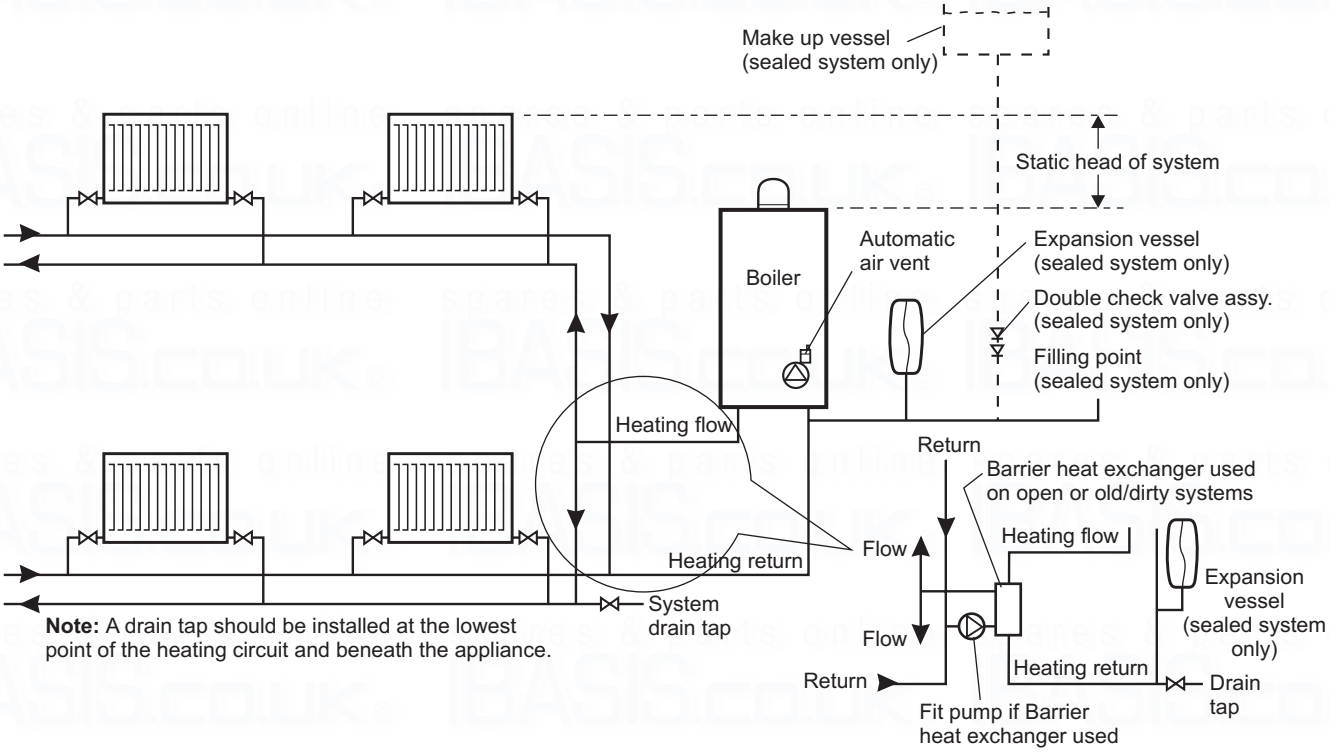

Note: A drain tap should be installed at the lowest point of the heating circuit and beneath the appliance.

Fig. 3.3

3.9 FILLING THE SEALED CENTRAL HEATING SYSTEM - Figs. 3.4, 3.6

The system design pressure (cold) should be set to 1.0 bar. This pressure is equivalent to a static head (see Fig. 3.3) of 10.2 metres of water.

Provision should be made to replace water lost from the system. This can be by manual or automatic means, as shown in Figs. 3.4 and 3.5. The position for connecting an automatic make-up vessel is indicated in Fig. 3.3. A double check valve assembly must be used, as shown in Fig. 3.5.

Filling of the system must be carried out in a manner approved by the local Water Undertaking. Where allowed, the system may be filled via a temporary connection as shown in Fig. 3.4. After filling, always disconnect the flexible hose of the filling loop.

All fittings used in the system must be able to withstand pressures up to 4 bar.

Drain taps (to BS 2879) must be used to allow the system to be completely drained.

A pressurisation unit may also be used to maintain the system level. Refer to the instructions supplied with the unit for correct installation.

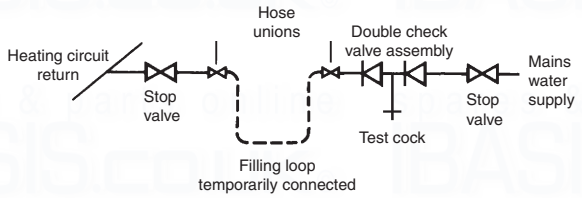

Fig. 3.4

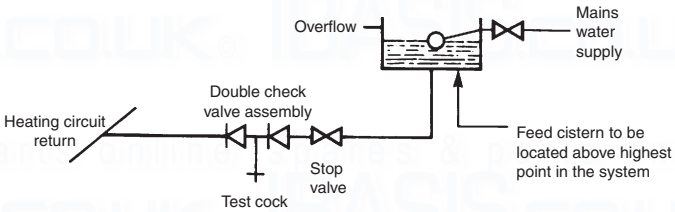

Fig. 3.5

3.10 FLUSHING THE HEATING SYSTEM

It is essential that the central heating system is thoroughly cleaned and flushed when fitting an Alpha Pro Tec Plus boiler. Failure to do so will invalidate the warranty. If this is difficult because the system is old/dirty refer to Section 3.8, Fig. 3.3 gives consideration to using a barrier heat exchanger.

The primary condensing heat exchanger is constructed in stainless steel and therefore is compatible with most materials used in a heating system.

A cleaning agent and inhibitor should be used, they must be applied in accordance with their manufacturers instructions. Only products from Fernox and Sentinel are acceptable for use with the Alpha Pro Tec Plus boilers. Further information can be obtained from Fernox (Tel: 0179 9521133) or Sentinel (Tel: 0151 4209563).

The system should be flushed in accordance with BS 7593 and BS 5449. The following procedures are recommended:

1. Installing onto a new system:-
   a. Fill the system, vent at high points, at pump and radiators.
   b. Check for leaks.
   c. Rapidly drain the system.
   d. If required, chemically clean the system as instructed by the recommended cleaner manufacturer.
      Note: Ensure that the system is flushed to remove any remains of the cleaner.
   e. If chemical cleaner is not used to clean the system:-
      i) Refill the system.
      ii) Switch on the boiler and allow the system to heat up to the normal operating temperature.
      iii) Rapidly drain the system while the water is still hot.
      iv) Refill the system.
   f. As required, add the recommended inhibitor to the system as instructed by the inhibitor manufacturer.
   g. Recheck for leaks.
2. Installing onto an existing system, clean the system before fitting the new boiler:-
   a. If the old boiler is still working:-
      i) Switch on the boiler and allow the system to heat up to the normal operating temperature.
      ii) Rapidly drain the system while the water is still hot.
      iii) Refill and chemically clean the system as instructed by the recommended cleaner manufacturer.
      iv) Ensure the system is flushed to remove any remains of the cleaner.
      v) Fit the new boiler.
   b. If the old boiler is not working:-
      i) Rapidly drain the system.
      ii) Remove the old boiler.
      iii) Flush the system through.
      iv) Fit the new boiler.
      v) Refill and chemically clean the system as instructed by the recommended cleaner manufacturer.
      vi) Ensure the system is flushed to remove any remains of the cleaner.
   c. As required, add the recommended inhibitor to the system as instructed by the inhibitor manufacturer.
   d. Check for leaks.

3.11 DISPOSAL OF CONDENSATE

Provision must be made for the safe disposal of condensate produced by Alpha Pro Tec Plus boilers and reference should be made to BS 6798: 2000 for the requirements on the disposal of condensate.

The boilers incorporate a condensate trap which has a seal greater than 75 mm, therefore no additional trap is required.

The condensate should ideally be discharged internally into an internal waste pipe or soil pipe to avoid the possible risk of freezing. The pipework must be in at least 22 mm pipe.

External pipe runs should be avoided, but if it is necessary, the pipework should be at least 32 mm and protected from the risk of freezing with waterproof insulation and the length should be kept to a maximum of 3 m. Termination should be into an external gulley or soakaway as shown in Figs. 3.6 and 3.7.

Note: All pipework must have a continuous fall (see Figs. 3.6 and 3.7) from the boiler and must be of an acid resistant material such as plastic waste pipe, (copper or steel is not suitable).

It should be noted that the connection of a condensate pipe to a drain may be subject to local building control requirements.

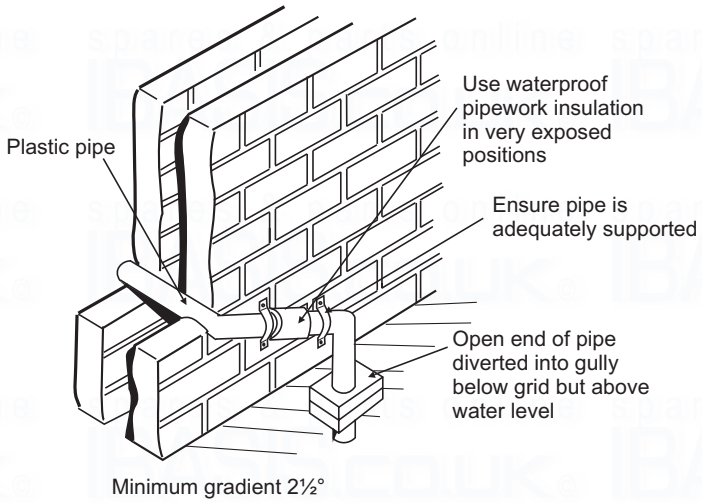

Fig. 3.6 - External gully

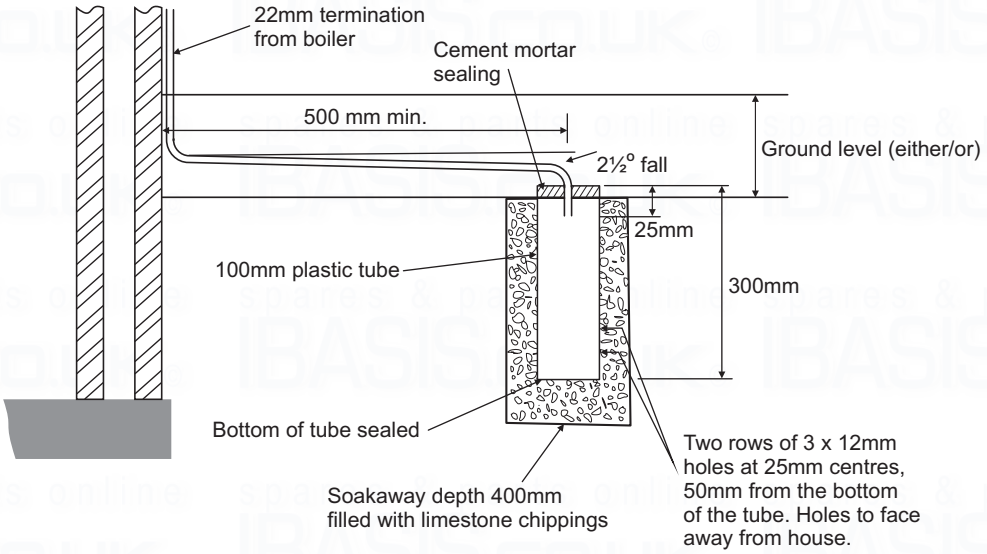

Fig. 3.7 - External soakaway

4 INSTALLATION

4.1 UNPACKING

1. The basic boiler is supplied in a single box, containing the following:-

   Cased boiler supplied with water connections and washers
   Mounting hooks and wall plugs with coach screws
   Tundish for pressure relief valve outlet
   Condensate discharge pipe
   Gas service cock and 28 mm connection tail
   Literature pack and Wall template

   Other parts of the flue system are supplied in separate packs as ordered.
2. Unpack boiler and remove the loose items.

4.2 DIMENSIONS and CONNECTIONS

4.2.1 Pro Tec Plus 50

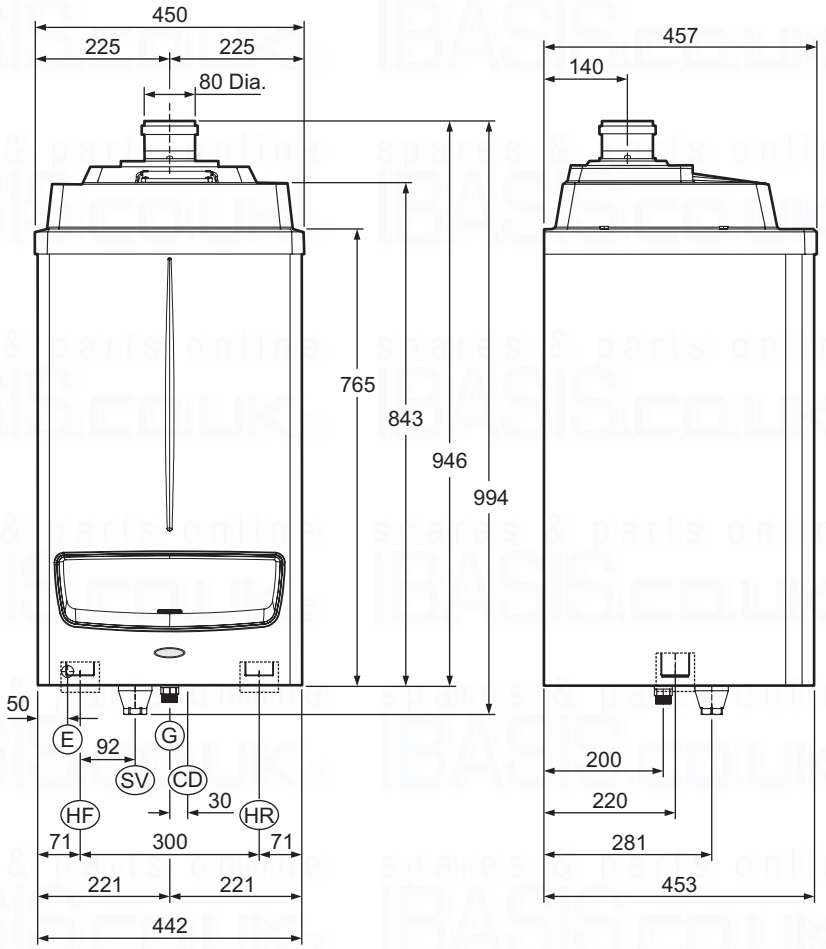

E - Electrical connection
G - Gas supply
HR - Heating return
HF - Heating flow
CD - Condensate drain
SV - Safety valve outlet (tundish)

Fig. 4.1

4.2.2 Pro Tec Plus 70, 90, 115

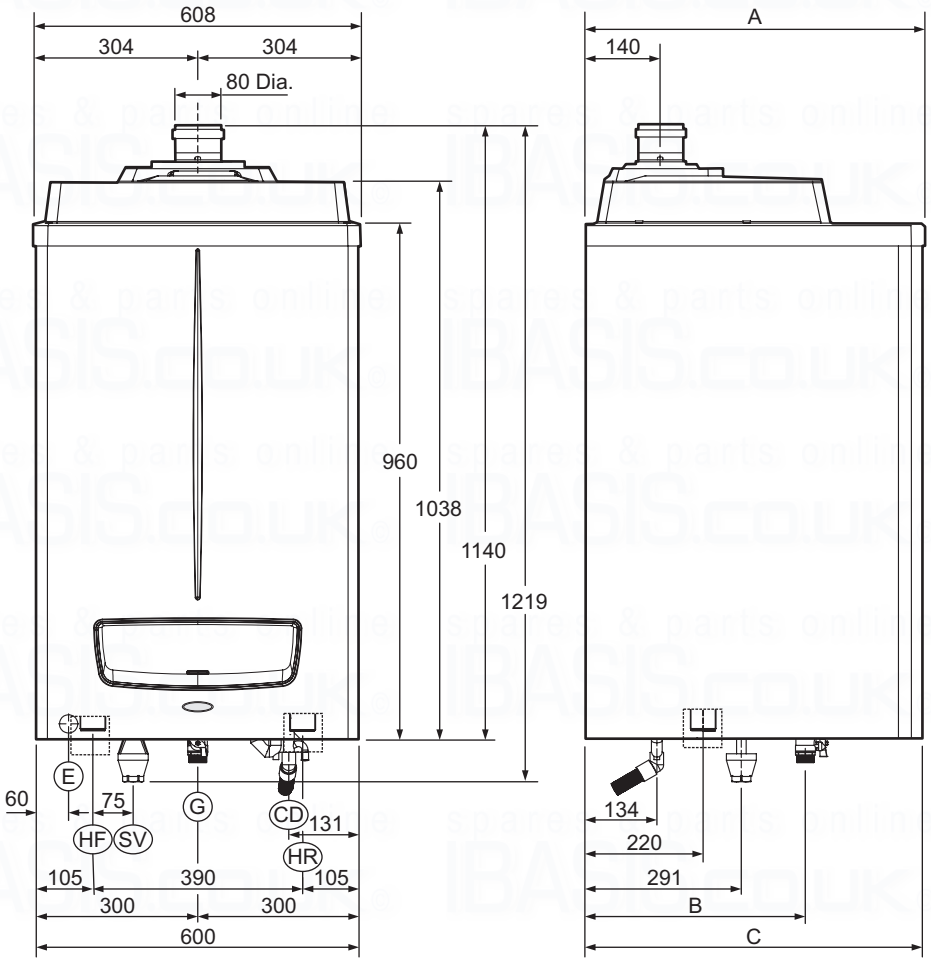

	Pro Tec Plus 70	Pro Tec Plus 90, 115
A	502 mm	632 mm
B	265 mm	410 mm
C	497 mm	627 mm

E - Electrical connection
G - Gas supply
HR - Heating return
HF - Heating flow
CD - Condensate drain
SV - Safety valve outlet (tundish)

Fig. 4.2

4.3 PREPARE THE WALL - Fig. 4.3

1. Decide upon the position of the boiler taking into account the clearances required for servicing (refer to Section 2.2) and the flue terminal position.
2. Tape the template to the wall (ensure it is level and the right way up) and mark the position of the two holes for the boiler mounting hooks.
3. Drill the fixing holes (12 mm dia.) to accept the No. 12 plugs supplied. Screw the boiler mounting hooks fully into the plugs.
4. Cut suitable holes in the wall/roof 100 mm dia for open flue 80 mm dia. pipe or 127 mm dia. for concentric flue. Use the centre line positions given on the flue template.

   For side flue follow the horizontal line (ensuring at least a 25 mm/m fall towards the boiler) to the corner then 140 mm along the side wall to the centre of the hole for the flue.
5. Lift the boiler and locate it on the mounting hooks.

Note: When handling or lifting always use safe techniques - keep your back straight, bend your knees, don't twist - move your feet, avoid bending forwards and sideways and keep the load as close to your body as possible.
Where possible transport the boiler using a sack truck or other suitable trolley. Always grip the boiler firmly, and before lifting feel where the weight is concentrated to establish the centre of gravity, repositioning yourself as necessary.

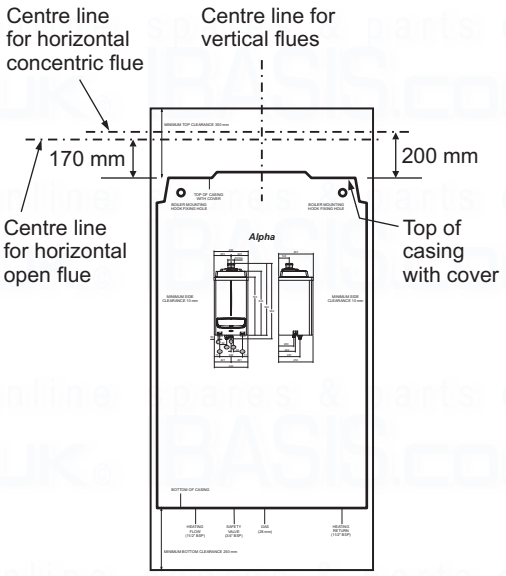

Fig. 4.3

4.4 CONNECT THE PIPEWORK

1. Thoroughly flush out all the system pipework. Refer to Section 3.10.
2. Connect the system flow and return pipework to the boiler using suitable isolating valves.
   Note: Do not forget that the pressure relief valve discharge pipe must be routed clear of the boiler to a drain in such a manner that it may be seen, but cannot cause injury to persons or property.
3. Connect the 22 mm condensate trap drain pipe to the condensate discharge pipe using the clip supplied.
   Ensure that the condensate discharge pipe is as required in Section 3.11.
   Pour at least 1 litre of water into the flue duct, as shown in Fig. 4.4, and check the condensate discharge pipe for soundness
4. Ensure that all the valves are closed and do not turn on the water or gas supplies at this stage.

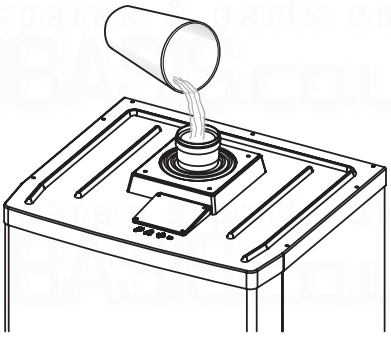

Fig. 4.4

4.5 'B23' TYPE SINGLE PIPE 80 mm FLUE KITS

Vertical kit - see Fig. 4.5 and 4.6, and refer to Section 3.4.

Fig. 4.5 shows the vertical flue kit parts.

To assemble the kit to the boiler - Slide the flue pipe down through the roof seal and place the seal over the flue duct. Push the flue duct into the flue socket on top of the boiler up to the stop. Ensure the seal is pushed in position against the ceiling.

To install extensions or other flue components, proceed as follows: fit the male end of the pipe or elbow up to the stop on the female socket (with lip seals) of the previously installed component, this will ensure a secure fit and seal of the joints. Ensure all joints have the seal located correctly and the tape supplied is applied around each joint to ensure the flue ducts cannot be pulled apart.

It is recommended that the flue should be supported at least every 1.5 m with access provided to the joints.

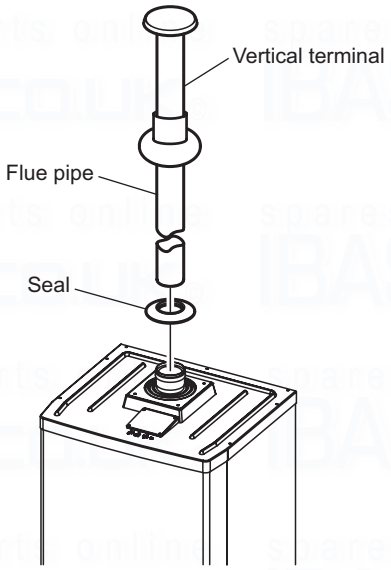

Fig. 4.5

	L Max.
Pro Tec Plus 50	30 m
Pro Tec Plus 70	28 m
Pro Tec Plus 90	14 m
Pro Tec Plus 115	8.5 m

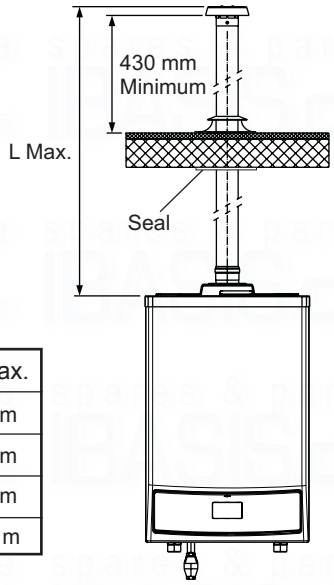

Fig. 4.6

Horizontal through the wall kit - see Fig. 4.7 and 4.8, and refer to Section 3.4.

Figs. 4.8 and 4.9 show the horizontal through the wall kit parts.

To assemble the kit to the boiler - Fit the male end of the flue elbow into central flue outlet on the top of the boiler to the stop. Place the outer seal over the flue duct and slide it through the wall from the outside. Place the inner seal over the flue duct then insert the duct into the elbow up to the stop. Slide the seals along the duct to seal it to the inside and outside of the wall.

To install extensions or other flue components, proceed as follows: fit the male end (smooth) of the pipe or elbow up to the stop on the female socket (with lip seals) of the previously installed component, this will ensure a secure fit and seal of the joints.

Note: To prevent condensate lying in the flue pipe, slope the pipe towards the boilers with a minimum slope of 2.5° - 3° (25 - 30 mm per metre). When installing the extensions, a wall/ceiling mounted clamp must be installed at least every 1.5 metres.

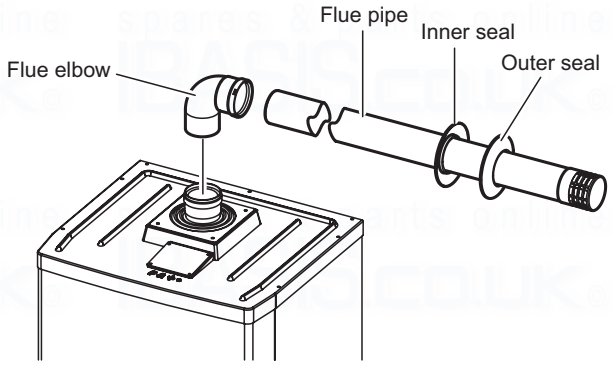

Fig. 4.7

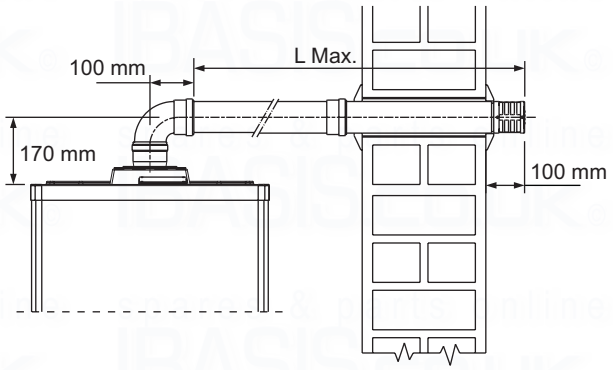

	L Max.
Pro Tec Plus 50	30 m
Pro Tec Plus 70	28 m
Pro Tec Plus 90	14 m
Pro Tec Plus 115	8.5 m

Note: Ensure the flue slopes downwards towards the boiler by a minimum of 25 to 30 mm per metre (2.5° to 3°)

Fig. 4.8

4.6 'C' TYPE CONCENTRIC FLUE KITS

Convert the boiler from the factory supplied 'B23' type configuration to 'C' type, i.e. room sealed concentric flue by removing the 80 mm dia. adaptor and four screws securing the fixing plate and gasket from the top of the boiler.

Horizontal through the wall concentric flue kit - see Fig. 4.9 and 4.10.

Fig. 4.9 shows the flue kit parts that need to be fitted to the boiler to ensure the room sealed concentric flue can be used.

To assemble the kit to the boiler - Fit the adapter into the central flue outlet on the top of the boiler up to the stop. Slide the square gasket over the adapter up to the groove, then fix it to the cover by means of the previously removed fixing plate and four screws. Fit the male end of the flue elbow up to the stop on the adapter. Place the outer seal over the concentric flue pipe and slide it through the wall from the outside. Place the inner seal over the concentric flue pipe then insert the pipe into the elbow up to the stop. Slide the seals along the duct to seal it to the inside and outside of the wall.

To install extensions or other flue components, proceed as follows: fit the male end (smooth) of the concentric pipe or concentric elbow up to the stop on the female socket (with lip seals) of the previously installed component, this will ensure a secure fit and seal of the joints.

Note: To prevent condensate lying in the flue pipe, slope the pipe towards the boilers with a minimum slope of 3° (25 - 30 mm per metre). When installing the extensions, a wall/ceiling mounted clamp must be installed every 1.5 metres.

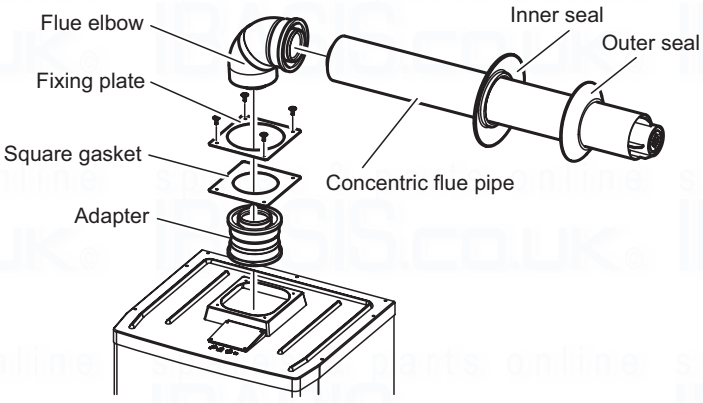

Fig. 4.9

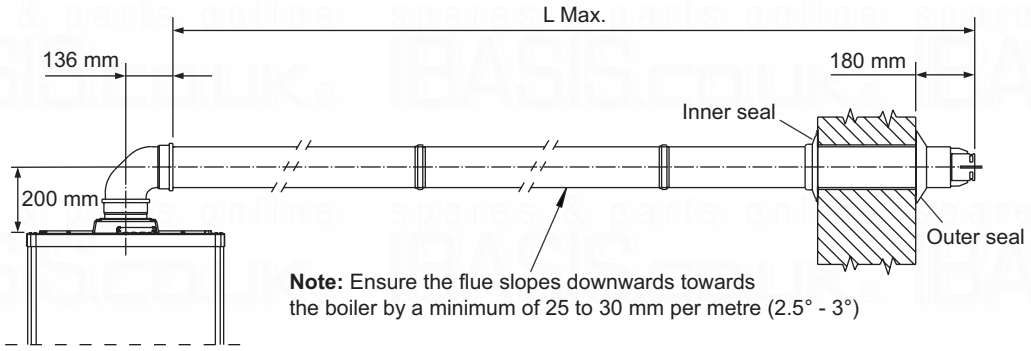

	L Max.
Pro Tec Plus 50	14.5 m
Pro Tec Plus 70	11 m
Pro Tec Plus 90	8 m
Pro Tec Plus 115	5 m

Fig. 4.10

4.7 CONNECT THE MAINS SUPPLY AND EXTERNAL CONTROLS - Fig. 4.11

Gain access as described below while referring to Fig. 4.12

1. Remove the case front panel as follows:
   a. Remove the two screws (1) from the bottom of the front panel (2).
   b. Grip the handle in the bottom of the panel and pull it forwards to detach it from the central catches (3) then slide it down from the top fixings (4) and remove.
2. Remove the two screws and washers (5) securing the sides of the control panel. Press the two side hooks (6) and tilt the control panel (7) forwards.
   Remove the three screws (8) securing the control box cover (9) to gain access to the terminal block.
   Refer to Technical Data, Section 2.3 for connection details.
   Note: This boiler has been fitted with a mains supply cable. However, if it is necessary to fit an alternative supply cable, ensure the cable clamp that has been fitted is removed and connect as follows:-
   Pass the mains supply cable through the cable clamp and connect as follows:- Brown to L, Blue to N and Green/Yellow to ⏚. Ensure correct polarity.
   Note: Ensure that the length of the earth wire is such that if the supply cable is pulled out of its clamp the live and neutral wires become taut before the earth wire.
   Do not switch on the electrical supply at this stage.
3. **If any external control, i.e. room thermostat etc. is to be fitted, refer to Fig. 4.11.**
   Do not connect 220/240 volts to any of the other terminals.

It is recommended that only the mains supply is connected to the boiler when first commissioning. External controls can then be connected after the boiler has been commissioned. This prevents any external controls interrupting the commissioning process.

4. Ensure that there is sufficient free cable to allow the control panel to be raised and lowered then tighten the cable clamp screws.
5. Leave the control panel open until commissioning procedures have been completed.
6. Carry out electrical system checks - Short circuit, Polarity, Earth continuity and Resistance to earth with a suitable multimeter.

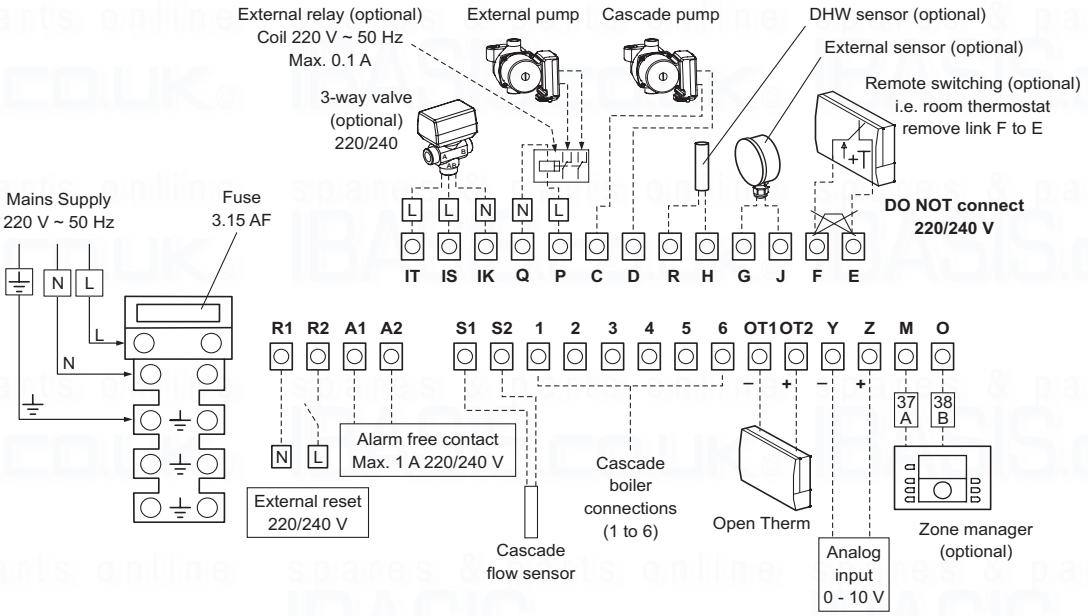

Fig. 4.11

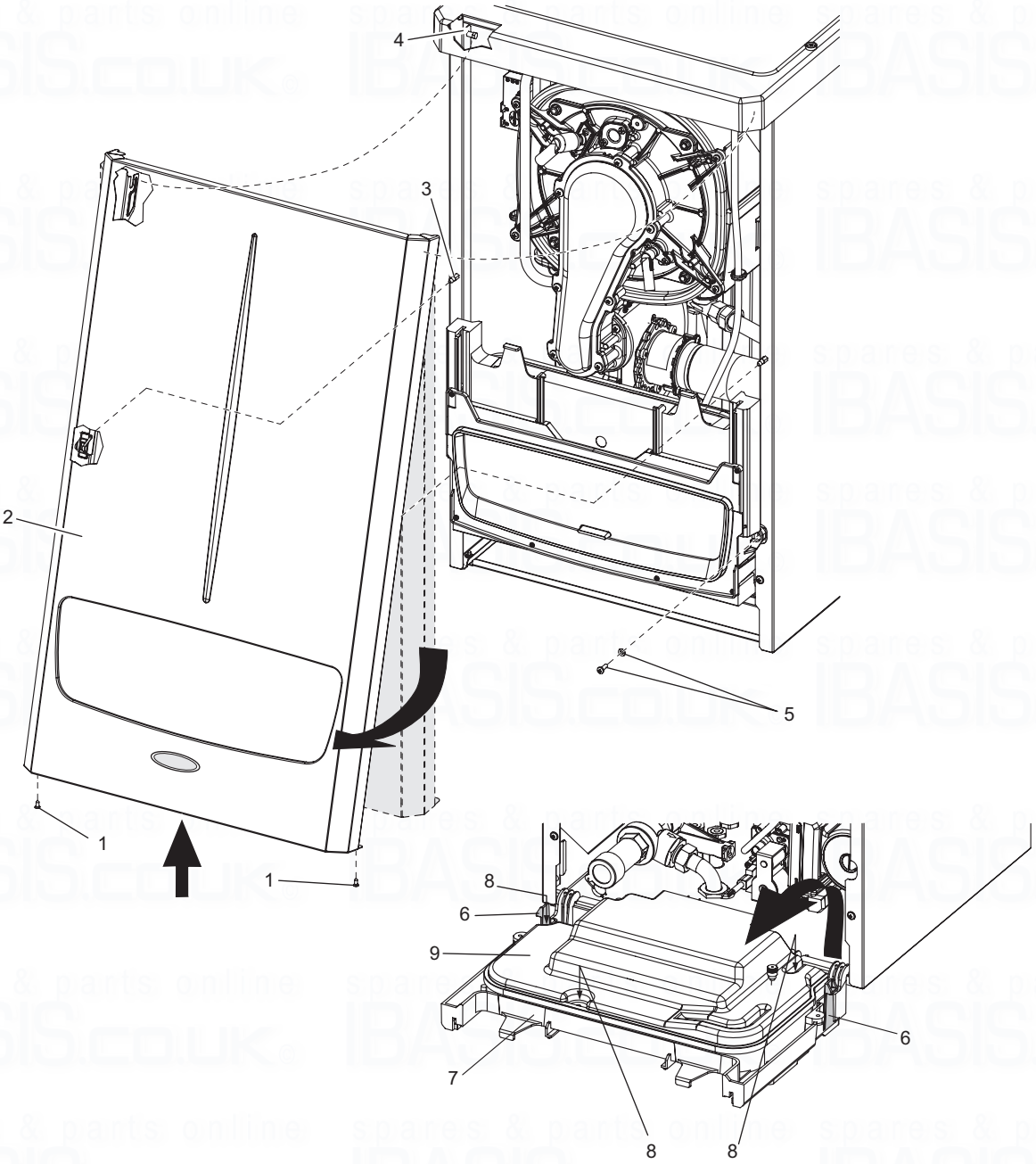

Fig. 4.12

5 COMMISSIONING and USING THE BOILER

When commissioning the boiler, ensure the Benchmark Checklist is completed.

5.1 FILL THE SYSTEM

If the front cover has not been removed, refer to Section 4.7.

1. The Pro Tec Plus 50 has two automatic air vents (see Fig. 6.2), the Pro Tec Plus 70, 90, 115 boilers have one automatic air vent (see Fig. 6.3). Ensure that these are always open.
2. Open the central heating flow and return valves.
3. Open the fill point valve on the filling loop until water is heard to flow.
4. To remove the air - Vent each radiator in turn, starting with the lowest in the system.

   Note: The Pro Tec Plus 50 model **must be** vented using the manual air vent on the top left of the heat exchanger (**see Fig. 6.2**).
5. It is important that the pump (see Fig. 6.2 or 6.3) is properly vented to avoid it running dry and damaging its bearings. Unscrew and remove the cap from the centre of the pump. Using a suitable screwdriver rotate the exposed spindle about half a turn, then replace the cap.
6. Check the operation of the safety valve (see Fig. 6.2 or 6.3) by turning the head anti-clockwise until it clicks. The click is the valve lifting off its seat allowing water to escape from the system - check that this is actually happening.
7. Continue to fill the system until the pressure gauge indicates 1.0 bar. Close the fill point valve and check the system for water soundness, rectifying where necessary. Disconnect the filling loop from the mains supply. If the system has been over pressurised water may be released from the system by manually operating the drain point (see Fig. 2.4 or 2.5) until the system design pressure is obtained. The system design pressure (cold) should be between 0.75 and 1.25 bar.

   Refer to Sections 3.9 and 3.10. Filling and Flushing the system.

5.2 TEST FOR GAS TIGHTNESS AND PURGE THE SUPPLY

1. With the boiler gas service cock closed. Pressure test the gas supply and inlet pipework connection to the boiler gas service cock for tightness in accordance with BS 6891.
2. Loosen the gas inlet pressure test point screw on the gas valve (see Fig. 5.1). Ensure the gas supply is on and open the boiler service cock to purge in accordance with BS 6891.
3. Retighten the test point screw and test for gas tightness. Close the boiler gas service cock.

Pro Tec Plus 50, 70 gas valve

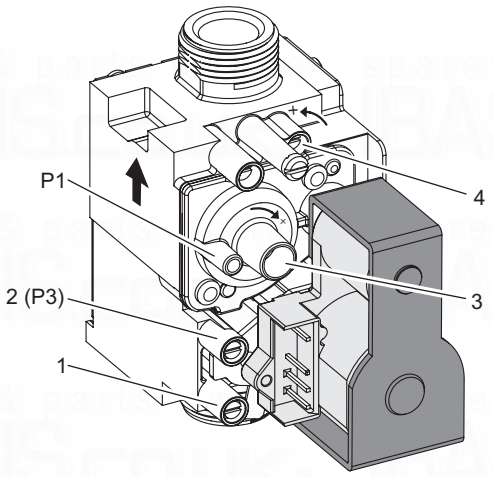

Pro Tec Plus 90, 115 gas valve

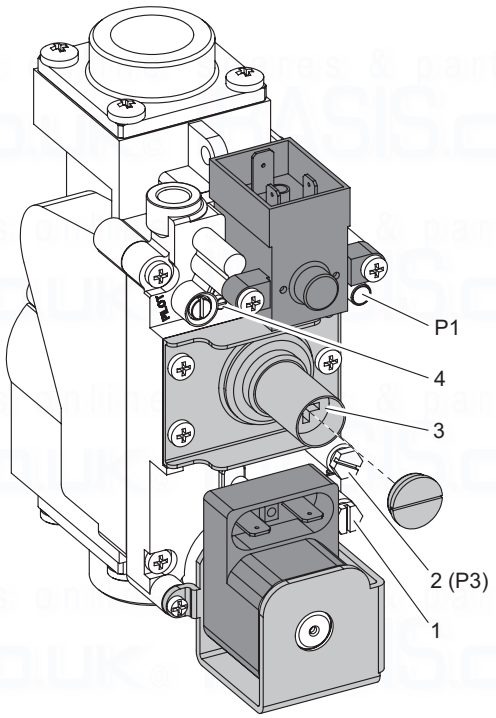

1 - Inlet gas pressure point
2 - Outlet gas pressure point
3 - Off/Set adjustment screw (minimum)
4 - Outlet flow regulator (maximum)

Fig. 5.1

5.3 BOILER CONTROLS - Fig. 5.2

Raise the control panel cover using the handle '3' in Fig. 5.2.

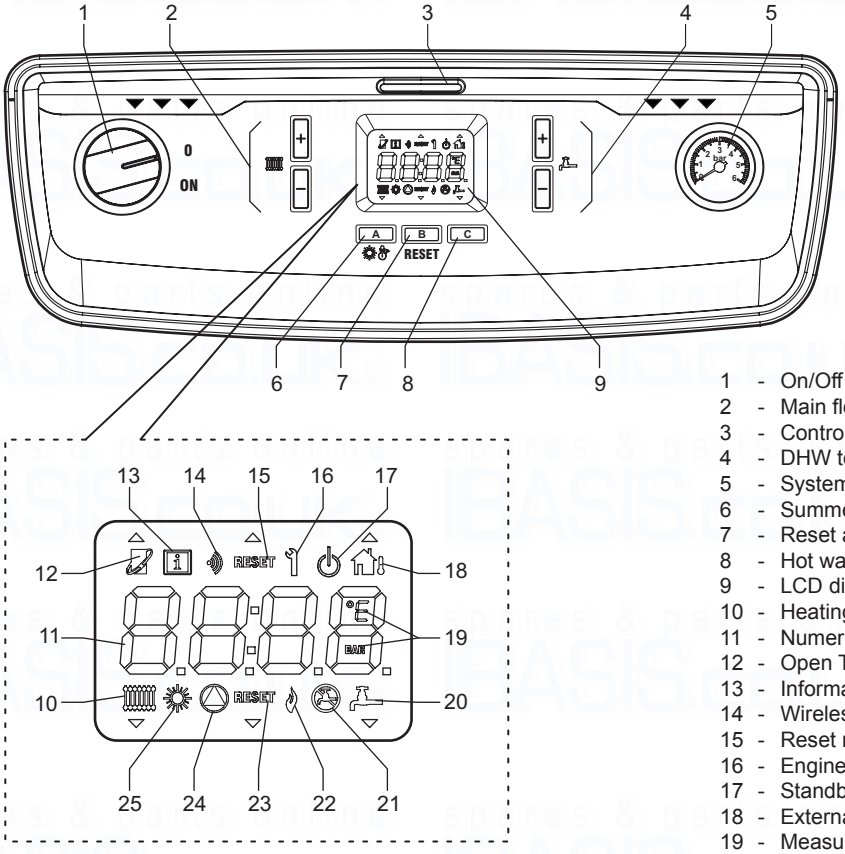

1 - On/Off switch
2 - Main flow temperature - Increase or Decrease
3 - Control panel cover handle
4 - DHW temperature - Increase or Decrease (optional)
5 - System pressure gauge
6 - Summer/Winter mode selector button (A)
7 - Reset and information button (B)
8 - Hot water enable/disable button (C)
9 - LCD display
10 - Heating function
11 - Numeric indicators - Temperature, Info and Fault codes
12 - Open Therm function
13 - Information icon
14 - Wireless feature
15 - Reset required
16 - Engineer mode for system setup
17 - Standby mode
18 - External temperature feature (optional)
19 - Measurement value units
20 - DHW function active (optional)
21 - DHW function disabled
22 - Burner ON
23 - Reset required
24 - Internal pump running
25 - Summer mode active

Fig. 5.2

5.4 BOILER LCD DISPLAY AND CONTROL BUTTONS

The boiler display (see Fig. 5.2), is composed of a 4-character display and 7 buttons. By using these buttons it is possible to adjust the boiler as it would be by using traditional selector switches and knobs.

The function of each button is listed in Fig. 5.2.

When the boiler is operating, the display indicates the mode icons and the boiler flow temperature.

5.5 INITIAL LIGHTING - Refer to Fig. 5.2

1. Ensure that the gas and electrical supplies to the boiler are off and that the heating flow and return valves are open.
2. Check that the system has been pressurised to the required pressure (at least 1 bar).
3. Turn on the gas and electrical supplies to the boiler.
4. Ensure any external controls are calling for heat.
5. Set the On/Off switch to ON.

The boiler pump will run through a brief air purging cycle. At the beginning of this cycle the display will check the software and connections.

When the purge cycle is complete the boiler will then respond to the request of the heating controls and the burner will light if a demand is present. The boiler will only fire at low level initially and will ramp up gradually according to the heat demand.

Allow the boiler to run and heat the circuit, checking for leaks and correct circulation, testing any secondary circuits and zone controls for correct operation.

During operation gas working pressure and gas rate checks can be conducted using the engineering function. Refer to Section 5.7.

'A' operating mode button( ) - With the boiler on, press button 'A' repeatedly to change the operating mode. It will switch from Summer mode ( ) (DHW heating only, when the optional kit is installed) to Winter mode (DHW and room heating), alternately.

With the boiler on but not running, the screen will display the flow sensor temperature reading.

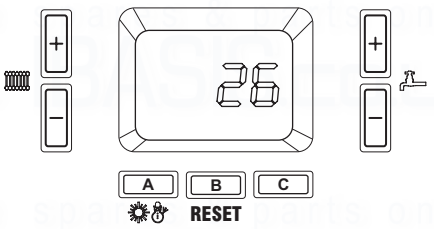

Fig. 5.3

When the boiler switches on the relative symbols will be displayed and the flow sensor temperature reading shown.

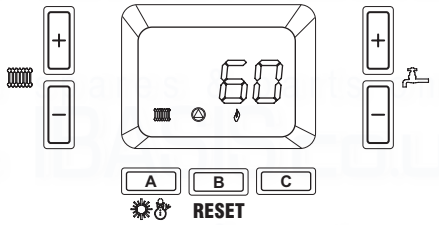

Fig. 5.4

Summer ( ) - In this mode the boiler only operates for DHW heating (optional kit).

By pressing the + or - buttons (as shown in Fig. 5.5) just once it is possible to read the temperature setting. By pressing them again you can change the settings as needed. You will need to press button 'B' to save the new value. The temperature reading will flash during adjustment. If a certain amount of time lapses without saving the value, the boiler will exit the setting mode and maintain the previous setting.

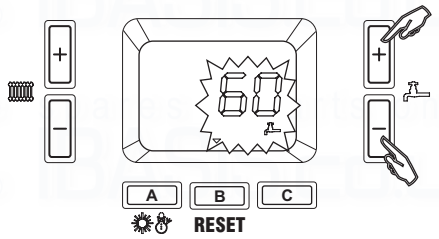

Fig. 5.5

Winter ( ) - In this mode the boiler provides both DHW and room heating.

By pressing the + or - buttons (as shown in Fig. 5.6) once, you can view the temperature setting. By pressing them again you can change the setting as needed. You will need to press button 'B' to save the new value. The temperature reading will flash during adjustment. If a certain amount of time lapses without saving the value, the boiler will exit the setting mode and maintain the previous setting.

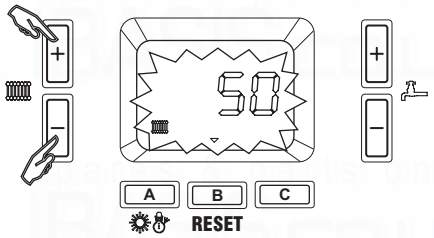

Fig. 5.6

Stand-by mode ( ) - By pressing buttons 'A' and 'C' (as shown in Fig. 5.7) at the same time it is possible to place the boiler in the standby mode.

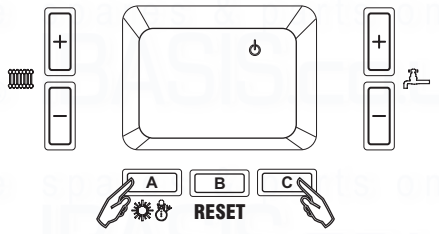

Fig. 5.7

In the standby mode the boiler is still switched on but not active, maintaining the anti-freeze function. To turn it back on simply press button 'B'.

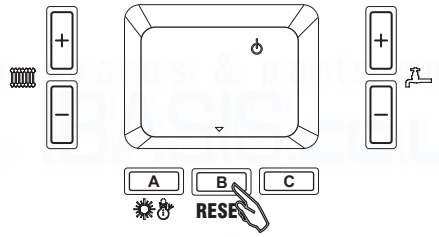

Fig. 5.8

DHW exclusion ( ) - With the boiler set up for DHW heating, press button 'C' momentarily to exclude the DHW heating mode operation. To return to the DHW heating mode, press button 'C' again as shown in Fig. 5.9.

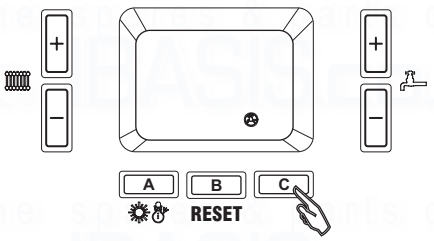

Fig. 5.9

Fault records - Press and hold button 'C' in to access the records of the last 8 faults that have affected the boiler (list from H i 0 to H i 7, where H i 0 is the most recent fault). When you are in the menu, the screen will display, in order, number 'bu 0', the number and code for the anomaly.

To scroll through the list, press the + and - buttons (as shown in Fig. 5.10).

To exit the menu, press and hold button 'C' in again.

Note: Faults with the “FE” code are not saved in the fault records.

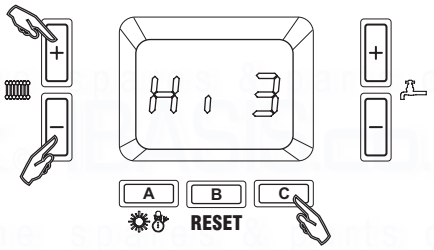

Fig. 5.10

Information menu - Press and hold in 'B' to access the information menu containing all of the various information relative to the boiler operation.

Once you are inside the menu, you will momentarily see the parameter number followed by the value.

To scroll through the various parameters, press the + and - buttons (as shown in Fig. 5.11).

To exit the menu, press and hold 'B' in again.

While the parameter value is being displayed it is possible to momentarily see the relative code again by pressing button 'A'. The viewable parameters are listed in the following table.

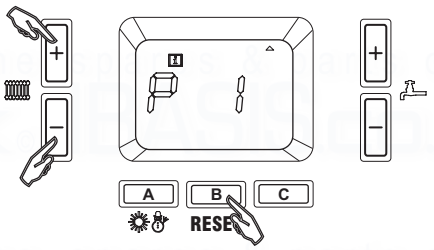

Fig. 5.11

Table of viewable parameters

Menu item	Description	Unit of measurement
P01	Flame current	µA
P02	Flow sensor temperature reading	°C / °F
P03	Return sensor temperature reading	°C / °F
P04	DHW sensor temperature reading (if installed)	°C / °F
P05	System water flow (boiler circuit)	l / minute
P06	Operating power (burner modulation)	%
P07	Fan speed requested by system	RPM / 50
P08	Current fan speed	RPM / 50
P09	Flue sensor temperature reading	°C / °F
P10	Not used	-
P11	External sensor temperature reading (if installed)	°C / °F
P12	Not used	-
P13	Flow temperature requested by system in heating	°C / °F
P14	Flow temperature requested by system in DHW	°C / °F
P15	Not used	-
P16	Not used	-
P17	Not used	-

5.6 FINAL COMMISSIONING

1. Allow the heating system to heat up, then balance the system to achieve the necessary temperature difference across the heating flow and return pipes at the boiler and check the system volume and pressure. (Refer to Technical Data, Section 2.1).
2. Turn off the boiler.
4. Thoroughly flush out the water pipework (refer to Section 3.10).
5. Re-pressurise the system as described in Section 5.1.

5.7 CHIMNEY SWEEP FUNCTION - COMBUSTION CHECKING

This function allows the combustion and gas rate checks to be conducted according to the data tables in Section 2.3. In the engineering function the boiler output can be adjusted between 0% and 100% of the output range (Minimum to Maximum output).

To activate this function press and hold in button 'A'.
First select minimum output (0%) by pressing the DHW - button and check the CO_2 value according to the table in Section 2.3. Then select maximum output (100%) by pressing the DHW + button, again checking the CO_2 value and gas supply working pressure as specified in the table in Section 2.3.

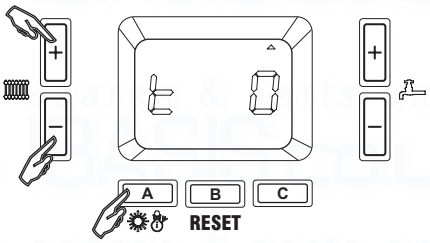

Fig. 5.12

Output values between 0% and 100% can be selected using the CH + and - buttons to change the value in 1% increments. This function can be used to hold the boiler at a desired output level and conduct system tests and checks.

During this function all external controls and thermostats are inactive and only the overheat thermostats and safety controls remain active. This function can be disabled by pressing and holding in button 'A'.

If you enable this function when no external demand is present, please wait 1 minute to allow the burner to reach the desired output and stabilise. If you enable the function during an external request, i.e. the boiler is working in heating mode, you will need to wait at least 3 minutes for any overrun and purge cycle to finish before the burner reaches the selected output and any measurements can be taken.

5.8 FINAL ASSEMBLY

1. Raise and secure the control panel, replace the front cover and secure in position with the screws previously removed.
2. If the boiler is to be left in service with the User, set any external controls to the User's requirements.
3. If the boiler is not to be handed over immediately, close the boiler gas service cock and switch off the electrical supply.
4. If there is any possibility of the boiler being left during frost conditions, then the boiler and system should be drained. It is recommended that a label is attached to the boiler drawing attention to the fact that the system has been drained.
5. Complete the details of the installation in the Benchmark Checklist at the back of this manual.

5.9 USER INFORMATION

The User must be advised (and demonstrate if necessary) of the following important points:-

1. How to light and turn off the boiler and how to operate any external system controls.
2. The importance of annual servicing of the boiler to ensure safe and efficient operation.
3. That any servicing or replacement of parts must only be carried out by Gas Safe registered personnel.
4. Ensure that the boiler controls are set to the User's requirements.
5. Tell the User about the sealed system pressure.
6. Tell the User that if the electrical supply is on and the boiler has not operated for 24 hours, the pump will automatically operate for 5 minutes.
7. Explain to the User that an internal frost thermostat is fitted in the boiler, and that the electrical supply to the boiler must be left on for the thermostat to operate.
8. Explain to the User that in certain weather conditions the terminal will emit a plume of steam, i.e. water vapour. This is safe and quite normal.
9. Show the User the position of the pressure relief valve and condensate discharge pipes.
10. Hand the User's instructions to the User.
11. Ensure the Benchmark Checklist at the back of this manual has been completed after the boiler has been installed and commissioned.

    Note: It is a requirement that the installation is registered by the installer through the Gas Safe Gas Work Notification Scheme.
12. Leave these Installation and Servicing instructions with the User for use on future calls.

6 ROUTINE SERVICING

To ensure efficient operation of the boiler it is recommended that it is checked and serviced as necessary at regular intervals. The frequency of servicing will depend upon the particular installation conditions and usage, this must be at least once per year to maintain the boiler guarantee.

It is the law that any service work must be carried out by a competent person, i.e. Gas Safe registered personnel.

Warning: Before servicing the boiler, isolate the electrical supply and close the boiler gas service cock. Allow the boiler to cool.

The data label is positioned on the inside of the right hand side of the base plate.

Always test for gas tightness after servicing any gas carrying components.

Always carry out electrical system checks i.e. Earth Continuity, Resistance to Earth, Short Circuit and Polarity with a suitable meter after servicing.

General

Please Note: During routine servicing, and after any maintenance or change of part of the combustion circuit, the following must be checked:

1. The integrity of the flue system and the flue seals.
2. The integrity of the boiler combustion circuit and relevant seals.
3. The operational (working) gas inlet pressure at maximum rate.
4. The combustion performance, as described below.

Competence to carry out the check of combustion performance

Please Note: *BS 6798:2009 Specification for installation and maintenance of gas-fired boilers of rated input not exceeding 70 kW net* advises that:

1. The person carrying out a combustion measurement should have been assessed as competent in the use of a flue analyser and the interpretation of the results.
2. The flue gas analyser used should be one meeting the requirements of BS 7927 or BS-EN 50379-3 and be calibrated in accordance with the analyser manufacturers' requirements.
3. Competence can be demonstrated by satisfactory completion of the CPA1ACS assessment, which covers the use of electronic portable combustion gas analysers in accordance with BS 7967, Parts 1 to 4.

Combustion check

Connect the flue gas analyser to the flue gas sampling point as shown in Fig. 6.4 or 6.5.

Notes: 1. Prior to servicing, it is recommended that a flue gas analyser is used to measure the performance of the boiler. If the CO/CO_2 ratio measured is greater than 0.003 **or** when other checks and comments from the customer have indicated that there may be problems, cleaning of the heat exchanger will be necessary. Repeat the flue gas analyser test after reassembling the boiler and check that the CO/CO_2 ratio is less than 0.003.

If the CO/CO_2 ratio reading is still above, then you must repeat the checks and cleaning until you obtain a ratio reading of below 0.003.

If the combustion reading is greater than the acceptable value AND the integrity of the complete flue system and combustion circuit seals have been verified and the inlet gas pressure (and gas rate) have been verified. Please call our Technical Helpline.

2. If the CO/CO_2 ratio measured is less than 0.003 and other checks and comments from the customer suggest there are no problems then only Section 6.1 and Section 6.2 paragraphs 1, 2 and 3 need to be carried out to allow a visual check of the components within the boiler casing.

6.1 IMPORTANT NOTES PRIOR TO SERVICING

1. Check the flue terminal outside and ensure it is not blocked.
2. Run the boiler and check the operation of its controls.
3. Ensure that all system connections and fittings are sound.
4. Refill, vent and re-pressurise the system as necessary. (Refer to Commissioning, Section 5.1).
   If the system pressure exceeds 3.5 bar when operating at maximum temperature, the heating expansion vessel should be checked and re-pressurised, if necessary.

   Notes: 1. Check the expansion vessel charge only when the system pressure is zero.
   2. The expansion vessel must be the correct size for the system.
5. Check that the condensate trap drain pipe is connected and all joints are sound.
6. Record details of the service in the Service Record Section at the back of this manual.

6.2 CASING REMOVAL - Figs. 4.11, 6.1

If required, the casing can be completely removed as follows:

1. Remove the case front panel as described in Section 4.7, paragraph 1.
2. Remove the two screws and washers (5) securing the sides of the control panel. Press the two side hooks (6) and tilt the control panel (7) forwards.
3. Remove the bottom panel (10) by removing the four screws (11).
4. If necessary, you can remove the top cover (12) and side panels (14)

   Loosen the seven screws (13) securing the top cover (12).

   Remove the two screws (15) securing the side panel (14). Lift the side panel and pull it forwards unhooking it from the rear panel (view 'A' in Fig. 6.1) Lower the panel out and away from the top cover.

Note: If only the front panel is to be removed, remove as described in Section 4.7, paragraph 1.

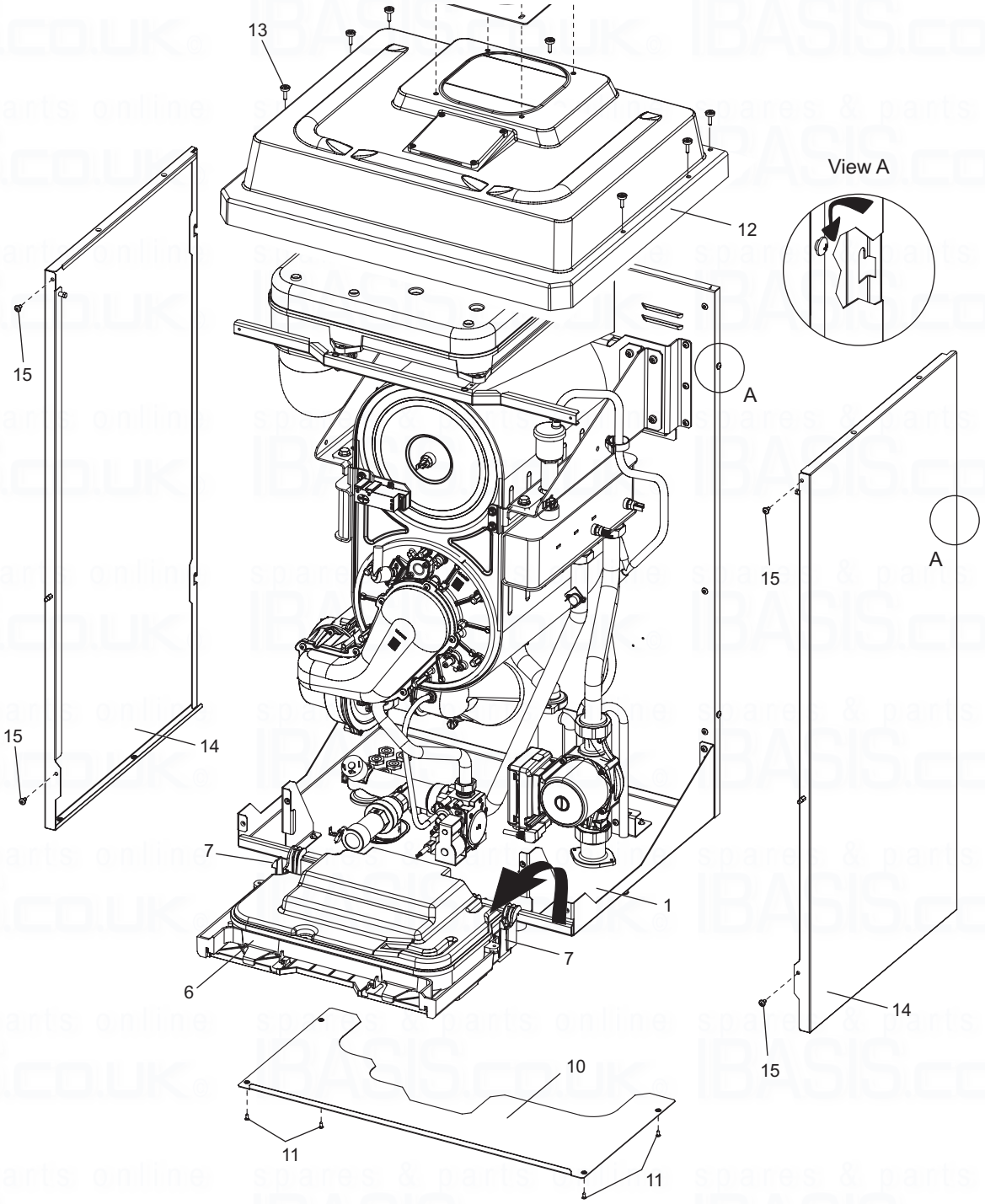

Fig. 6.1 (Pro Tec Plus 50 shown)

6.3 PREPARE FOR SERVICING - Fig. 6.4 or 6.5

1. Ensure the electrical supply is isolated and the gas supply is off.
2. Remove the front panel and lower the control panel as described in Section 4.7, paragraphs 1 and 2.

Pro Tec Plus 50 model

1. Disconnect the electrode lead from the ignition generator and the in-line connector to the flame sensing electrode.
2. Remove the two M4 screws securing the fan to the combustion chamber front.
3. Remove the four screws located on the end tabs securing the combustion chamber front to the boiler chassis.
4. Using a 10 mm ring spanner remove the four nuts securing the combustion chamber front to the heat exchanger. Slide the complete assembly from the heat exchanger.

Pro Tec Plus 70, 90, 115 models

1. Disconnect the gas supply pipe union from the burner manifold.
2. Remove the two screws securing the fan assembly to the combustion chamber front.
3. Remove the pressure tube.
4. Disconnect the electrode lead from the ignition generator and the in-line connector to the flame sensing electrode.
5. Remove the six nuts and washers securing the combustion chamber front and remove the complete assembly.

6.4 CLEANING THE BOILER

1. Remove any deposits from heat exchanger using a suitable soft brush. Do not use a brush with metallic bristles.
2. Check the condition of the combustion chamber insulation panels.
3. Check the condition of the burner on the combustion chamber front assembly, carefully clean with a soft brush if necessary. Do not use a brush with metallic bristles as this might damage the burner.
4. Remove any deposits from the heat exchanger coils. This can be done by suction or water sprayed onto the coils. Ensure all electrical components are protected from water. Any water used to clean the heat exchanger will drain through the condensate trap.
5. Check the condition of the electrodes.
6. Check the spark gap, positioning and height of the electrodes. Refer to Fig. 6.2 or 6.3.
7. Unscrew the condensate trap drain to remove any deposits and flush with clean water.

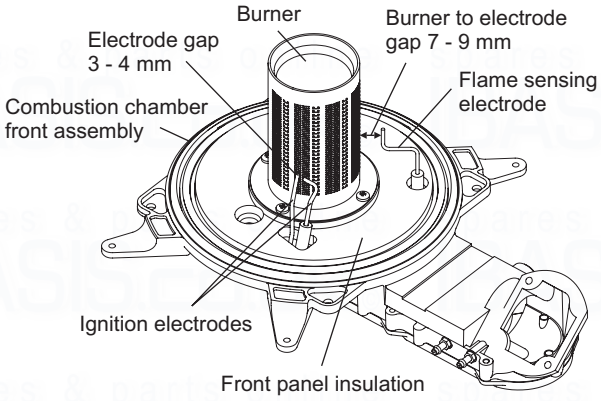

Fig. 6.2 - Pro Tec Plus 50

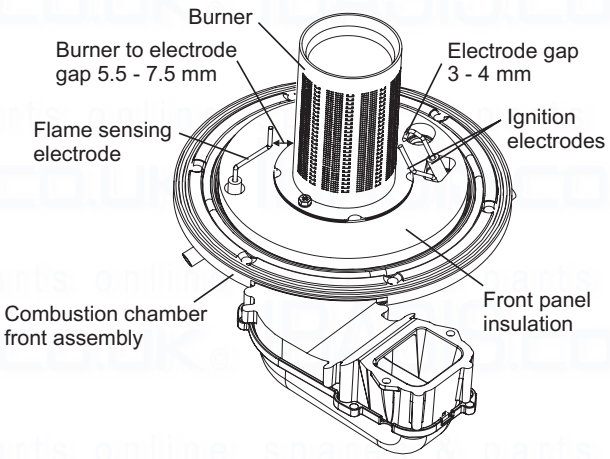

Fig. 6.3 - Pro Tec Plus 70, 90, 115

6.5 RE-ASSEMBLE THE BOILER

Important: Before replacing the combustion chamber front assembly, pour at least 200 cc of water into the coils of the heat exchanger. This is to ensure the condensate trap is full of water before operating the boiler.

1. Replace the combustion chamber front assembly, ensuring it is correctly located.
2. Ensure the electrode lead is connected.
3. Re-connect the gas pipe to the manifold, test the connections for gas tightness and re-commission, see Section 5.
4. Re-connect the fan assembly to the combustion chamber assembly.
5. Place the case or front case panel in position and secure in position with the screws previously removed, see Section 6.2.
6. Check the operation of the boiler.
7. Return all controls to their original settings.

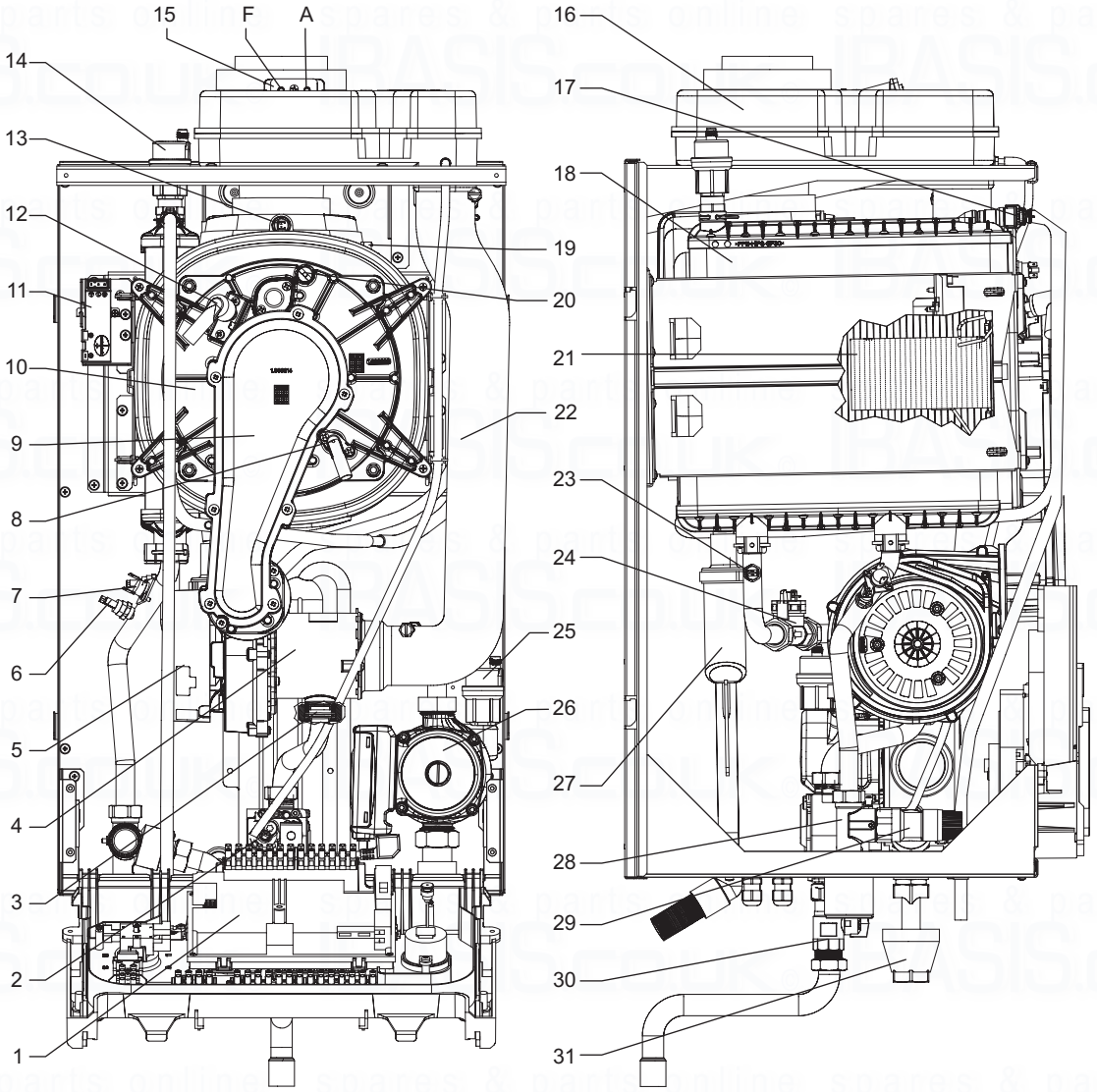

1	PCB	17	Manual air vent
2	Gas valve	18	Condensing heat exchanger
3	Injector	19	Heat exchanger thermal fuse
4	Venturi housing	20	Overheat thermostat (manual reset)
5	Fan	21	Burner
6	System flow NTC	22	Air intake pipe
7	Overheat thermostat	23	System return NTC
8	Flame detection electrode	24	Primary flow sensor
9	Manifold cover	25	Automatic air vent
10	Combustion chamber front cover	26	Pump
11	Ignition unit	27	Condensate trap
12	Ignition electrode	28	Flow manifold
13	Flue sensor	29	Safety valve 4 bar
14	Automatic air vent	30	Gas cock
15	Test points (air A) - (flue F)	31	Tundish
16	Flue hood manifold		

Fig. 6.4 Pro Tec Plus 50

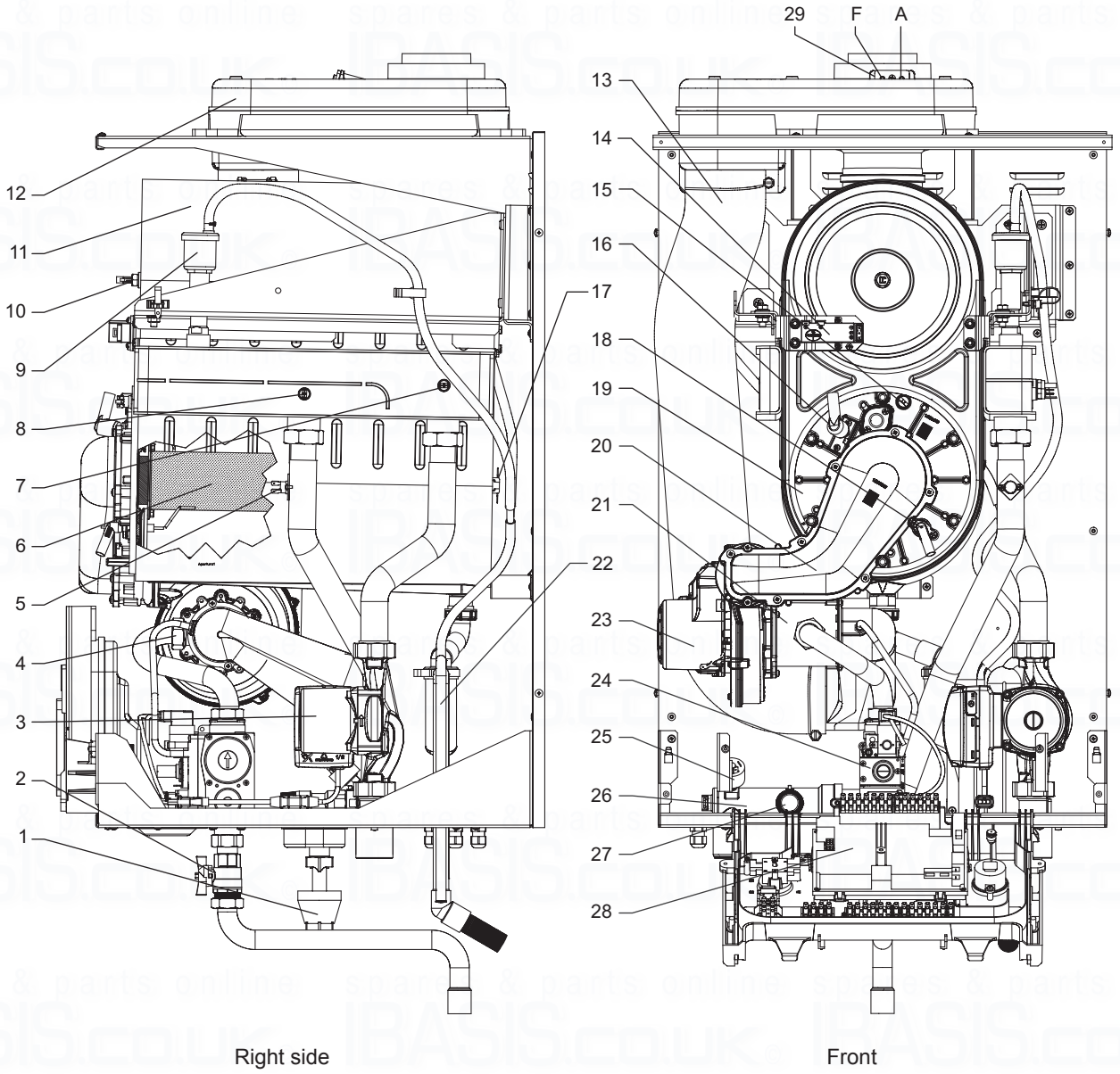

1	Tundish	16	Ignition electrode
2	Gas cock	17	Heat exchanger thermal fuse
3	Pump	18	Flame detection electrode
4	Injector	19	Combustion chamber front cover
5	Overheat thermostat	20	Manifold cover
6	Burner	21	Venturi housing
7	System return NTC	22	Condensate trap
8	System flow NTC	23	Fan
9	Automatic air vent	24	Gas valve
10	Flue sensor	25	System pressure switch
11	Condensing heat exchanger	26	Flow manifold
12	Flue hood manifold	27	Safety valve 4 bar
13	Air intake pipe	28	PCB
14	Ignition unit	29	Test points (air A) - (flue F)
15	Overheat thermostat (manual reset)		

Fig. 6.5 Pro Tec Plus 70, 90, 115

7 WIRING DIAGRAM

Pro Tec Plus 50 model only **Pro Tec Plus 70, 90, 115 models only**

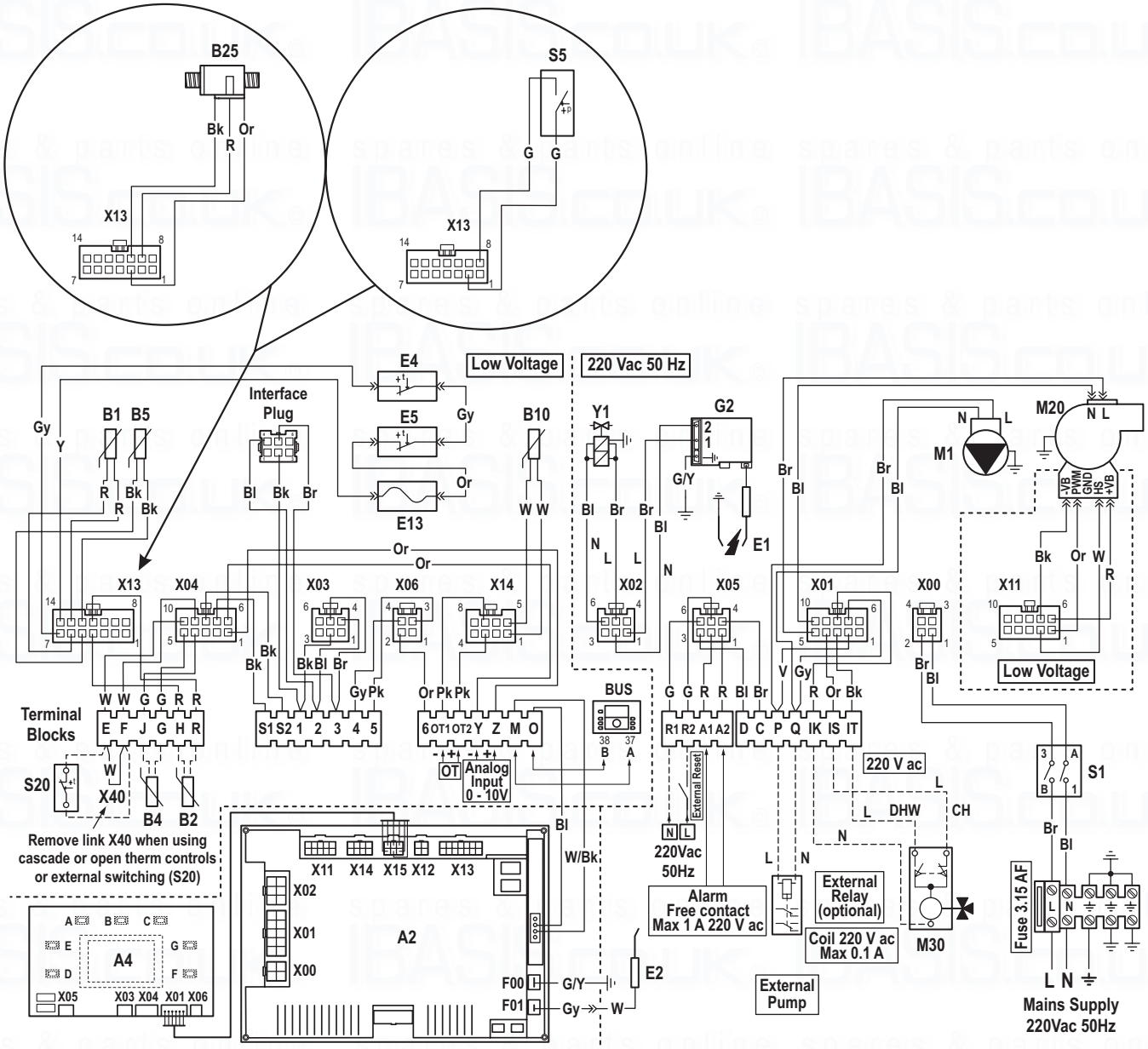

Component Key

A2	PCB
A4	Display board
B1	Flow sensor
B2	DHW sensor (optional)
B4	External sensor (optional)
B5	Return sensor
B10	Flue sensor
B25	CH flow measuring device (50 model only)
E1	Ignition electrode
E2	Flame sensing electrode
E4	Overheat thermostat
E5	Overheat thermostat (manual reset)
E13	Flue safety thermofuse
G2	Ignition unit
M1	Boiler pump
M30	3-way valve motor (optional)
M20	Fan
S1	Main switch
S5	System pressure switch (70, 90, 115 models only)
S20	Room thermostat (optional)
X40	Room thermostat jumper
Y1	Gas valve

Colour Code

Bk	Black
Bl	Blue
Br	Brown
G	Green
Gy	Grey
G/Y	Green/Yellow
Or	Orange
V	Violet
Pk	Pink
R	Red
W	White
W/Bk	White/Black

WARNING: ISOLATE ELECTRICAL SUPPLY BEFORE REMOVING ANY COVERS

Fig. 7.1

8 FAULT FINDING

The boiler will let you know of any faults by the flashing screen and code.

There are different types of codes that can be divided up as follows:

'0Axx' for resettable faults (Fig. 8.1). (Before resetting the fault you will need to wait for the boiler to finish its post ventilation function, which lasts approximately 60 seconds.

'0Exx' and 'FExx' for non-resettable anomalies.

The 'xx' suffix stands for the fault code described in the following tables.

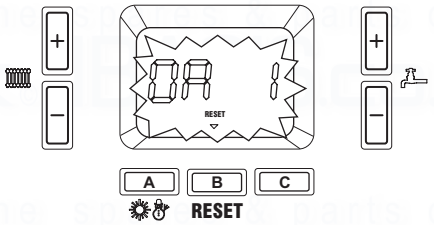

Fig. 8.1

Fault code 0A	Fault description	Possible solutions
0A1	Ignition failure.	Check for correct gas supply (purged and valves open). Check ignition electrode position and spark. Check flame sensing electrode connections. Check gas valve operation.
0A2	Flame detection fault.	Check flame sensing electrode connections. Check for a short circuit to the electrode or wires.
0A3	Overheat thermostat lock-out. Relating to thermostats, thermal fuse, or manual reset thermostat.	Check for water circulation. Check for air in the heat exchanger. Check for system restrictions and blockages. Check overheat thermostat and connections. Reset overheat thermostat if required
0A5	Fan speed fault.	Check flue and ventilation. Check air inlet manifold and pipe. Check for fan damage/fault. Check fan wire connections.
0A7	High flue temperature fault.	Check for air in the primary heat exchanger. Check for system restrictions causing overheating. Check the flue run for restrictions or blockages.
0A9	Gas valve electrical error.	Check gas valve connections. Check main PCB. Check gas valve operation. Check for gas contamination.
0A15	Flow and return sensor anomaly detected. The sensor shows an incorrect temperature value.	Check for poor or incorrect circulation. Check for external circuit influences. Check resistances of flow and return sensors.
0A16	Flow sensor temperature rise incorrect. The time taken for the flow temperature to rise is too great.	Check system circulation. System volume or flow is too high. The boiler output is insufficient for the system.
0A17	Return sensor temperature rise incorrect. The time taken for the return temperature to rise is too great.	Check system circulation. System volume or flow is too high. The boiler output is insufficient for the system.
0A18	Flow and return sensor anomaly detected. Sudden temperature change detected on the flow or return sensor.	Check system circulation. Check operation of zone valves. Check resistances and function of flow and return sensors.
0A21	Main PCB fault.	Check all electrical connections. Check for water ingress in connections.
0A30	Flow sensor short circuit.	Check flow sensor connections and wires. Check for water ingress in connections.
0A31	Flow sensor out of range. Sensor measures a temperature outside normal working range.	Check flow sensor connections and damaged wires. Check sensor resistance values.
0A37	Not used	
0A43	Return sensor short circuit.	Check return sensor connections and wires. Check for water ingress in connections.
0A44	Return sensor out of range. Sensor measures a temperature outside normal working range.	Check return sensor connections and damaged wires. Check return sensor resistance values.
0A80	Flow and return sensor connection fault. Fault may occur after several minutes of boiler operation.	Check the wires are connected to the correct sensors.

Fault code 0E	Fault description	Possible solutions
0E2	Flame sensing fault.	Check flame sensing electrode connections. Check for a short circuit to the electrode or wire.
0E8	Flame circuit fault.	Check for correct gas supply (purged and valves open). Check ignition electrode position and spark. Check flame sensing electrode gap and connections.
0E13	Maximum number of resets reached. More than five reset attempts have been reached within 15 minutes.	Investigate initial fault code displayed. Switch the power supply Off/On to clear this code.
0E25	Main PCB fault.	Check all electrical connections. Check for water ingress in connections.
0E32	DHW sensor short circuit.	Check DHW sensor connections and wires. Check for water ingress in connections.
0E33	DHW sensor out of range. DHW sensor measures a temperature outside normal working range.	Check DHW sensor connections and damaged cables. Check DHW sensor resistance values.
0E34	Low powers supply voltage.	Check electrical socket connections. Check external power supply.
0E37	Insufficient system pressure.	Check the system for circulation and restrictions. Check system pressure and gauge. Check pressure switch and connections.
0E45	Flue sensor short circuit.	Check flue sensor connections and wires. Check for water ingress in connections.
0E46	Flue sensor out of range. Flue sensor measures a temperature outside normal working range.	Check flue sensor connections and wires. Check flue sensor resistance values.
0E81	Flow and return sensor anomaly detected. The sensor shows an incorrect temperature value.	Check for poor or incorrect circulation. Check for external circuit influences. Check resistances of flow and return sensors.
0E98	Simple cascade communication error.	Check 'M to O' connections. Check compatible software on PCB.
0E99	Simple cascade communication error.	Check wiring connections on all boilers.

Fault code FE	Fault description	Possible solutions
FE94	Display PCB fault.	Check electrical connections to display board. Check for water ingress in connections. Check for damage to buttons or LCD screen.
FE95	External flow sensor out of range or short circuit. External flow sensor measures a temperature outside normal working range.	Check external flow sensor connections and damaged wires. Check external flow sensor resistance values between 5 and 0.
FE96	External sensor fault.	Check external sensor connections and wires. Check for water ingress in connections. Check boiler parameter settings are correct.
FE97	Boiler PCB configuration error. This may occur if the main PCB or display PCB is changed.	Check all electrical connections. Check for correct parameter settings on PCB. Press '-' CH button until 'AUTO' appears, then press and hold 'RESET' button until 'bu1' appears.

9 PROGRAMMING THE BOILER PCB

The boiler is supplied with the PCB configuration set according to the boiler model, however it is possible to adjust certain parameters according to the boiler and system configuration.

Note: These parameters should only be adjusted by an approved Alpha engineer or Agent.

To access the programming menu, press and hold buttons 'B' **and** 'C' simultaneously. The screen will display the letter P and a corresponding parameter number and then display the corresponding set value for that parameter. Scroll through the parameters by using the CH + and – buttons ('1' as shown in Fig. 9.1). To change a parameter value press the DHW + and – buttons ('2' as shown in Fig. 9.11) to the desired value.

The parameter value is stored by either moving to the next parameter or by pressing button 'B'.

Exit the parameter menu saving your new settings by pressing the buttons 'B' **and** 'C' simultaneously. The boiler will then run a self-diagnostics cycle displaying PARA and Auto on the screen.

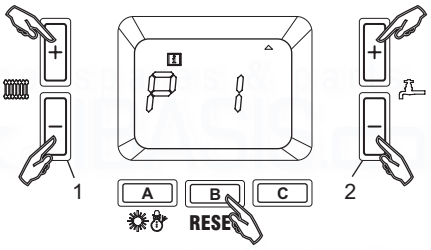

Fig. 9.1

Note: After approximately 2 minutes the boiler will automatically exit this menu without saving any changes and running a self-diagnostics cycle displaying PARA and Auto on the screen.

Parameter Programming Menu				
Parameter	**Feature**	**Description**	**Adjustment**	**Default value**
P01	Set CH flow temp.	CH flow temp. range.	20 - P02 °C	85
P02	Set max. flow temp.	Max. flow temp.	20 - 95°C	85
P03	Heating hysteresis (cycling)	Flow temp. differential between cycling.	2 - 10°C	5
P04	Anti cycling time	Time delay between firing to avoid boiler cycling.	0 - 15 mins	3
P05	Stabalisation period	Initial stabalisation period at min. rate.	3 - 10 mins	3
P06	CH ramp up	Rate to ramp up the CH flow temp. (0 is no ramp up).	0 - 60°C/min	4
P07	Pump overrun	Pump overrun time after CH set temp. is achieved.	1 - 30 mins	3
P08	Max. heat power output	Output power according to max. available.	P09 - 100%	100
P09	Min. heat power output	Min. output setting.	0 - P08%	0
P10	Min. pump flow rate (Pro Tec Plus 50 only)	Min. flow rate to activate the boiler. ***Note:*** Do not adjust this parameter (Pro Tec Plus 50 only).	5 - 47 l/min	14
P11	Anti humidity setting	Fan speed setting for anti heat exchanger humidity cycle (0 = disabled, recommended value = 40.	P26 - 120 RPM x 50	0
P12	Cascade min. modulation	% level of minimum modulation when in simple cascade		10
P13	Boiler power value	Boiler power information value - software setting for boiler type.	0 - 255 kW	50 model = 50 70 model = 70 90 model = 90 115 model = 115
P14	External sensor setting	External sensor operating gradient, 0 is disabled.	0 - 10 (must be set at 0 when in cascade)	0
P15	External sensor offset	CH offset in relation to external sensor gradient P14.	20 - 70°C	30
P16	DHW set temp.	Set temp. for DHW when using boiler DHW function.	20 - 65°C	65
P17	DHW function	0 = diverter valve, 1 = DHW pump after a header	0 - 1	0
P18	DHW reheat temp.	Temp. differential to reheat DHW function from P16.	2 - 10°C	5
P19	DHW overrun cycle	Overrun time after DHW set temp. is achieved.	0 - 180 sec	60
P20	Max. DHW output power	Max. power available during DHW function.	P21 - 100%	50
P21	Min. DHW ouput power	Min. power available during DHW function.	0 - P20%	0

Parameter Programming Menu				
Parameter	**Feature**	**Description**	**Adjustment**	**Default value**
P22	DHW flow temp. (stat)	Flow temp. during DHW function when using external thermostat.	30 - 90°C	80
P23	DHW flow temp. (NTC)	Min. flow temp. during DHW function, this value is above DHW set temp. P16.	5 - 30°C	15
P24	DHW off set point time	Time to continue firing to avoid boiler cycling during DHW function when set value is achieved.	0 - 255 sec	60
P25	Max. fan speed	Set the max. fan speed - boiler max. output power.	P26 - 255 RPM x 50	50 model, NG=131, LPG=129 70 model, NG=120, LPG=118 90 model, NG=132, LPG=128 115 model, NG=140, LPG=138
P26	Min. fan speed	Set the min. fan speed - boiler min. output power.	0 - P25 RPM x 50	50 model, NG=22, LPG=21 70 model, NG=24, LPG=22 90 model, NG=23, LPG=23 115 model, NG=24, LPG=23
P27	Min. pump speed	Minimum pump speed (percentage). Do not set values lower than the default value.	1 - 100%	50 model = 75 70, 90, 115 models = 30
P28	Pump speed during ignition	Pump speed during startup (percentage). Do not set values lower than the default value.	1 - 100%	50 model = 75 70, 90, 115 models = 40
P29	DHW sensor mode	Used to select the DHW sensor mode between sensor and On/Off thermostat.	1 = NTC sensor 17 = On/Off thermostat	1
P30	Ignition fan speed	Fan speed during ignition function. ***Note:*** Do not adjust this parameter.	0 - 114 RPM x 50 (range limited by P25 and P26)	46
P31	Display units	Display units - imperial or metric.	0 - 127 = °C - kW 128 - 256 = °F - Btu/h	0
P32	CH min. set point	Limits the minimum CH temperature value	20 - 50°C	20
P33	Cascade frost level	Temperature to activate frost protection in cascade mode	2 - 20°C	5
P34	Cascade frost off	Off temperature for frast protection in cascade mode	2 - 20°C	15
P35	Cascade delay	Switch delay in cascade mode	0 - 255 sec	60
P36	Temp. sampling time	Time between temp. sampling intervals. ***Note:*** Do not adjust this parameter.	1 - 10 sec	3
P37	0 - 10 V output	0 - 10 V control feature (0 = temperature, 1 = heat output)	0 - 1	0
P38	CH sensor option	Pressure of CH sensor (0 = none, 1 = fitted)	0 - 1	0

10 PERFORMANCE DATA

NOTE: The data provided in the following tables was obtained using 0.5 m concentric flue.
Gas flow rates refer to heating output below a temperature of 15°C and pressure of 1013 mbar.
Burner pressure values refer to use of gas at 15°C.
The number of revs for the fan on the display is expressed in revs / 50 (i.e. 1000 revs = 20).

Pro Tec Plus 50

	Natural Gas (G20)		Propane (G31)	
Heat Output (kW)	**Burner Gas Flow Rate** (m^3/h)	**Fan Revs** (rpm)	**Burner Gas Flow Rate** (m^3/h)	**Fan Revs** (rpm)
49.9	5.43	6550	3.98	6450
49.0	5.32	6430	3.91	6330
47.0	5.09	6170	3.74	6060
45.0	4.87	5910	3.57	5810
43.0	4.64	5660	3.41	5550
41.0	4.42	5410	3.25	5300
39.0	4.21	5160	3.09	5050
37.0	3.99	4910	2.93	4810
35.0	3.78	4670	2.77	4570
33.0	3.57	4430	2.62	4330
31.0	3.35	4200	2.46	4090
29.0	3.14	3960	2.31	3860
27.0	2.94	3720	2.16	3620
25.0	2.73	3490	2.00	3390
23.0	2.52	3260	1.85	3160
21.0	2.31	3020	1.69	2930
19.0	2.10	2790	1.54	2700
17.0	1.89	2550	1.39	2470
15.0	1.68	2310	1.23	2240
13.0	1.46	2080	1.07	2000
11.0	1.25	1840	0.91	1770
9.0	1.03	1590	0.75	1530
7.0	0.81	1350	0.59	1290
5.0	0.58	1100	0.43	1050

Pro Tec Plus 70

	Natural Gas (G20)		Propane (G31)	
Heat Output (kW)	**Burner Gas Flow Rate** (m^3/h)	**Fan Revs** (rpm)	**Burner Gas Flow Rate** (m^3/h)	**Fan Revs** (rpm)
68.0	7.40	6000	5.43	5900
66.0	7.17	5850	5.27	5750
64.0	6.95	5700	5.10	5600
62.0	6.73	5550	4.94	5450
60.0	6.52	5410	4.78	5310
58.0	6.30	5260	4.62	5160
56.0	6.08	5110	4.46	5010
54.0	5.86	4960	4.30	4860
52.0	5.65	4800	4.15	4700
50.0	5.43	4650	3.99	4550
48.0	5.22	4500	3.83	4400
46.0	5.00	4350	3.67	4250
44.0	4.79	4190	3.51	4090
42.0	4.57	4040	3.35	3940
40.0	4.36	3890	3.20	3790
38.0	4.14	3730	3.04	3630
36.0	3.93	3570	2.88	3470
34.0	3.71	3420	2.72	3320
32.0	3.50	3260	2.57	3160
30.0	3.28	3100	2.41	3000
28.0	3.07	2940	2.25	2840
26.0	2.85	2780	2.09	2680
24.0	2.64	2610	1.94	2510
22.0	2.42	2450	1.78	2350
20.0	2.20	2290	1.62	2190
18.0	1.99	2120	1.46	2020
16.0	1.77	1950	1.30	1850
14.0	1.55	1780	1.14	1680
12.0	1.33	1610	0.98	1510
10.0	1.11	1440	0.82	1340
8.0	0.89	1270	0.65	1170
7.2	0.80	1200	0.59	1100

Pro Tec Plus 90

	Natural Gas (G20)		Propane (G31)	
Heat Output (kW)	**Burner Gas Flow Rate** (m^3/h)	**Fan Revs** (rpm)	**Burner Gas Flow Rate** (m^3/h)	**Fan Revs** (rpm)
90.0	9.77	6600	7.17	6400
87.0	9.44	6370	6.93	6180
84.0	9.11	6140	6.68	5970
81.0	8.78	5910	6.44	5760
78.0	8.45	5680	6.20	5550
75.0	8.12	5460	5.96	5340
72.0	7.79	5240	5.72	5130
69.0	7.47	5030	5.48	4930
66.0	7.14	4810	5.24	4720
63.0	6.82	4600	5.00	4520
60.0	6.49	4390	4.77	4320
57.0	6.17	4180	4.53	4120
54.0	5.85	3980	4.29	3930
51.0	5.52	3780	4.05	3730
48.0	5.20	3580	3.82	3540
45.0	4.88	3380	3.58	3350
42.0	4.56	3180	3.34	3160
39.0	4.23	2980	3.11	2970
36.0	3.91	2790	2.87	2780
33.0	3.59	2600	2.63	2590
30.0	3.27	2410	2.40	2400
27.0	2.94	2220	2.16	2220
24.0	2.62	2040	1.92	2030
21.0	2.30	1850	1.68	1850
18.0	1.97	1670	1.45	1670
15.0	1.64	1490	1.21	1490
12.0	1.32	1310	0.97	1310
9.4	0.99	1150	0.73	1150

Pro Tec Plus 115

	Natural Gas (G20)		Propane (G31)	
Heat Output (kW)	**Burner Gas Flow Rate** (m^3/h)	**Fan Revs** (rpm)	**Burner Gas Flow Rate** (m^3/h)	**Fan Revs** (rpm)
111.0	12.07	7000	8.86	6900
108.0	11.74	6800	8.62	6700
105.0	11.41	6600	8.37	6500
102.0	11.08	6400	8.13	6300
99.0	10.75	6210	7.89	6100
96.0	10.42	6010	7.65	5910
93.0	10.09	5820	7.40	5710
90.0	9.76	5630	7.16	5520
87.0	9.43	5440	6.92	5340
84.0	9.10	5260	6.68	5150
81.0	8.78	5070	6.44	4970
78.0	8.45	4890	6.20	4780
75.0	8.13	4710	5.97	4600
72.0	7.80	4530	6.73	4430
69.0	7.48	4350	5.49	4250
66.0	7.15	4180	5.25	4070
63.0	6.83	4000	5.01	3900
60.0	6.51	3830	4.78	3730
57.0	6.18	3660	4.54	3560
54.0	5.86	3490	4.30	3390
51.0	5.54	3320	4.06	3230
48.0	5.21	3150	3.83	3060
45.0	4.89	2990	3.59	2900
42.0	4.57	2820	3.35	2740
39.0	4.24	2660	3.12	2580
36.0	3.92	2500	2.88	2420
33.0	3.60	2340	2.64	2260
30.0	3.27	2180	2.40	2100
27.0	2.95	2020	2.16	1950
24.0	2.62	1860	1.92	1800
21.0	2.30	1710	1.69	1650
18.0	1.97	1560	1.45	1500
15.0	1.64	1400	1.21	1350
12.0	1.32	1250	0.97	1200
11.0	1.21	1200	0.89	1150

11 CASCADE SYSTEM INSTALLATION

The Alpha Pro Tec Plus boilers can be cascaded together to increase output and versatility according to the building requirements. Cascade systems can vary in size and design with the option of up to five Pro Tec Plus boilers being connected using Alpha manifold kits and cascade flueing with a corresponding low loss header to suit. Additional controls are availble to enable mixed and/or direct heating zones and a hot water cylinder.

Alternatively a barrier heat exchanger can be used to separate the system from the boiler enabling connection to gravity or older heating circuits maintaining a clean pressurised circuit on the boilers.

F - Heating flow
SV - Safety valve outlet
G - Gas supply
CD - Condensate drain
R - Heating return

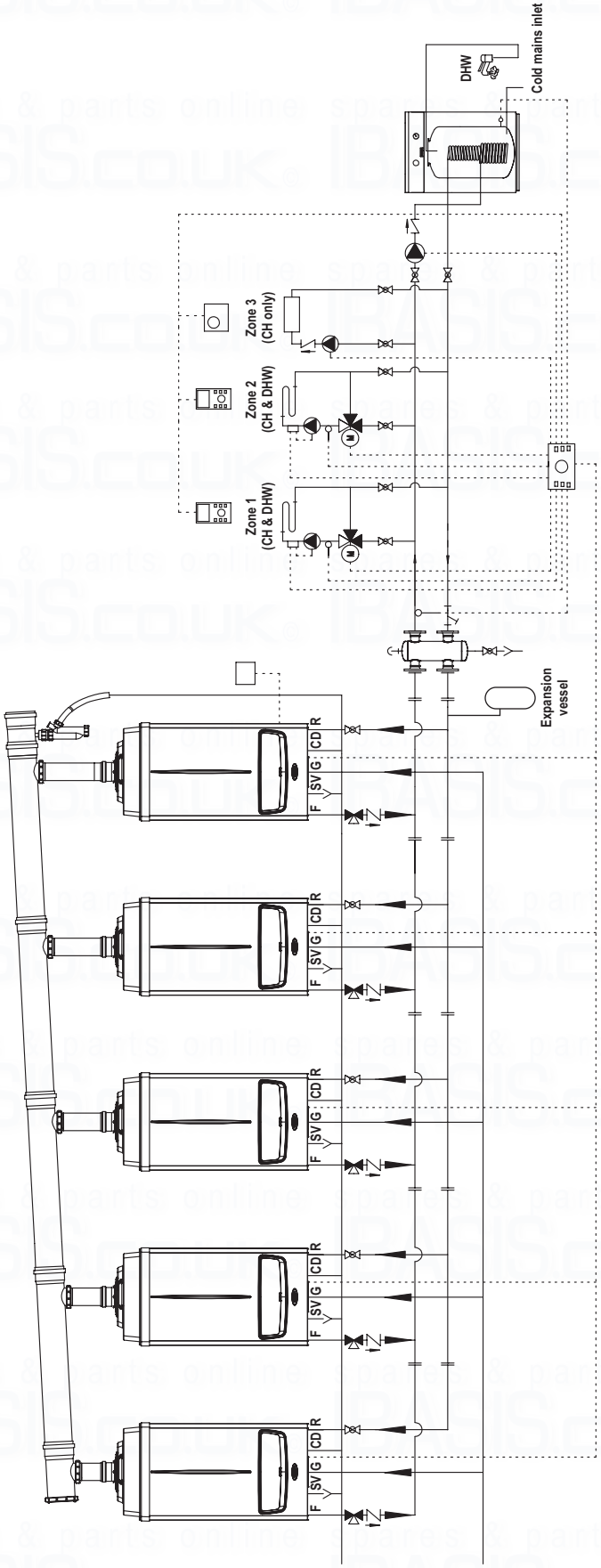

12 SHORT PARTS LIST

Description	Qty.	Alpha Pt. No.
Main PCB	1	1.033969
Display PCB	1	1.033971
Pressure gauge	1	1.035335
Flame sensing electrode	1	3.025476
Ignition electrode	1	1.028702
Burner - Pro Tec Plus 50	1	1.033957
Burner - Pro Tec Plus 70	1	1.034018
Burner - Pro Tec Plus 90, 115	1	1.033995
Fan - Pro Tec Plus 50	1	1.033960
Fan - Pro Tec Plus 70	1	1.035731
Fan - Pro Tec Plus 90	1	1.034142
Fan - Pro Tec Plus 115	1	1.036711
Flexible air intake pipe - Pro Tec Plus 50	1	1.036647
Flexible air intake pipe - Pro Tec Plus 70, 90, 115	1	1.035180
Flue hood manifold - Pro Tec Plus 50	1	3.023386
Flue hood manifold - Pro Tec Plus 70, 90, 115	1	3.020422
Flow / return NTC	1	1.023435
Pump - Pro Tec Plus 50	1	1.033966
Pump - Pro Tec Plus 70	1	1.034021
Pump - Pro Tec Plus 90, 115	1	1.038000
Automatic air vent - Pro Tec Plus 50	2	1.015436
Automatic air vent - Pro Tec Plus 70, 90, 115	1	1.2295
Primary pressure switch - Pro Tec Plus 70, 90, 115	1	1.018320
Primary flow switch - Pro Tec Plus 50	1	1.035966
Gas valve - Pro Tec Plus 50, 70	1	1.018472
Gas valve - Pro Tec Plus 90, 115	1	1.033996
Safety valve (4 bar)	1	3.024264
Overheat thermostat	1	1.016870
Overheat thermostat - manual reset	1	1.037212
Flue sensor - Pro Tec Plus 50	1	1.034101
Flue sensor - Pro Tec Plus 70, 90, 115	1	1.028832
Condensate trap	1	1.035733
Cascade address unit	1	1.034983
Spark generator	1	1.035601
Wall mounting hook	2	2.010615
Test point cover unit	1	1.025278
Wall fixing kit (hooks, screws, plugs)	1	3.019353
Hydraulic circuit seal kit	1	3.025041
Air intake and flue circuit seal kit	1	3.025042
Gas circuit seal kit	1	3.025043
Heat exchanger seal kit	1	3.025044
Complete boiler seal kit	1	3.025045
Ignition electrode lead	1	1.035386

13 ENERGY CLASSIFICATION

13.1 TECHNICAL PARAMETERS FOR MIXED BOILERS (IN COMPLIANCE WITH REGULATION 813/2013)

The values in the following tables refer to the maximum heating output.

Model(s):			Pro Tec Plus 50				
Condensing boiler:			YES				
Low-temperature boiler:			NO				
B1 boiler:			NO				
Cogeneration space heater:			NO	Equipped with a supplementary heater:			NO
Combination heater:			NO				
Item	Symbol	Value	Unit	Item	Symbol	Value	Unit
Rated heat output	P_n	50	kW	Seasonal space heating energy efficiency	η_s	92	%
For boiler space heaters and boiler combination heaters: useful heat output				For boiler space heaters and boiler combination heaters: Useful efficiency			
At rated heat output and high temperature regime (*)	P_4	49.9	kW	At rated heat output and high temperature regime (*)	η_4	87.7	%
At 30% of rated heat output and low temperature regime (**)	P_1	15.0	kW	At 30% of rated heat output and low temperature regime (**)	η_1	96.4	%
Auxiliary electricity consumption				Other items			
At full load	el_{max}	0.091	kW	Standby heat loss	P_{stby}	0.091	kW
At part load	el_{min}	0.018	kW	Ignition burner power consumption	P_{ign}		kW
In standby mode	P_{SB}	0.006	kW	Emissions of nitrogen oxides	NO_X	36	mg / kWh
For combination heaters:							
Declared load profile				Water heating energy efficiency	η_{WH}		%
Daily electricity consumption	Q_{elec}		kWh	Daily fuel consumption	Q_{fuel}		kWh
Contact details	Alpha Therm Ltd., Nepicar House, Wrotham Heath, Kent. TN15 7RS						

(*) High temperature regime means 60°C return temperature at heater inlet and 80°C feed temperature at heater outlet.
(**) Low temperature means for condensing boilers 30°C, for low-temperature boilers 37°C and for other heaters 50°C return temperature.

Model(s):			Pro Tec Plus 70				
Condensing boiler:			YES				
Low-temperature boiler:			NO				
B1 boiler:			NO				
Cogeneration space heater:			NO	Equipped with a supplementary heater:			NO
Combination heater:			NO				
Item	Symbol	Value	Unit	Item	Symbol	Value	Unit
Rated heat output	P_n	68	kW	Seasonal space heating energy efficiency	η_s	92	%
For boiler space heaters and boiler combination heaters: useful heat output				For boiler space heaters and boiler combination heaters: Useful efficiency			
At rated heat output and high temperature regime (*)	P_4	68.0	kW	At rated heat output and high temperature regime (*)	η_4	87.7	%
At 30% of rated heat output and low temperature regime (**)	P_1	20.4	kW	At 30% of rated heat output and low temperature regime (**)	η_1	96.6	%
Auxiliary electricity consumption				Other items			
At full load	el_{max}	0.098	kW	Standby heat loss	P_{stby}	0.143	kW
At part load	el_{min}	0.028	kW	Ignition burner power consumption	P_{ign}		kW
In standby mode	P_{SB}	0.004	kW	Emissions of nitrogen oxides	NO_X	22	mg / kWh
For combination heaters:							
Declared load profile				Water heating energy efficiency	η_{WH}		%
Daily electricity consumption	Q_{elec}		kWh	Daily fuel consumption	Q_{fuel}		kWh
Contact details	Alpha Therm Ltd., Nepicar House, Wrotham Heath, Kent. TN15 7RS						

(*) High temperature regime means 60°C return temperature at heater inlet and 80°C feed temperature at heater outlet.
(**) Low temperature means for condensing boilers 30°C, for low-temperature boilers 37°C and for other heaters 50°C return temperature.

The values in the following tables refer to the maximum heating output.

Model(s):			Pro Tec Plus 90				
Condensing boiler:			YES				
Low-temperature boiler:			NO				
B1 boiler:			NO				
Cogeneration space heater:			NO	Equipped with a supplementary heater:			NO
Combination heater:			NO				
Item	Symbol	Value	Unit	Item	Symbol	Value	Unit
Rated heat output	P_n	90	kW	Seasonal space heating energy efficiency	η_s	92	%
For boiler space heaters and boiler combination heaters: useful heat output				For boiler space heaters and boiler combination heaters: Useful efficiency			
At rated heat output and high temperature regime (*)	P_4	90.0	kW	At rated heat output and high temperature regime (*)	η_4	87.8	%
At 30% of rated heat output and low temperature regime (**)	P_1	27.0	kW	At 30% of rated heat output and low temperature regime (**)	η_1	97.1	%
Auxiliary electricity consumption				Other items			
At full load	el_{max}	0.143	kW	Standby heat loss	P_{stby}	0.145	kW
At part load	el_{min}	0.021	kW	Ignition burner power consumption	P_{ign}		kW
In standby mode	P_{SB}	0.005	kW	Emissions of nitrogen oxides	NO_X	18	mg / kWh
For combination heaters:							
Declared load profile				Water heating energy efficiency	η_{WH}		%
Daily electricity consumption	Q_{elec}		kWh	Daily fuel consumption	Q_{fuel}		kWh
Contact details	Alpha Therm Ltd., Nepicar House, Wrotham Heath, Kent. TN15 7RS						

(*) High temperature regime means 60°C return temperature at heater inlet and 80°C feed temperature at heater outlet.
(**) Low temperature means for condensing boilers 30°C, for low-temperature boilers 37°C and for other heaters 50°C return temperature.

Model(s):			Pro Tec Plus 115				
Condensing boiler:			YES				
Low-temperature boiler:			NO				
B1 boiler:			NO				
Cogeneration space heater:			NO	Equipped with a supplementary heater:			NO
Combination heater:			NO				
Item	Symbol	Value	Unit	Item	Symbol	Value	Unit
Rated heat output	P_n	115	kW	Seasonal space heating energy efficiency	η_s	92	%
For boiler space heaters and boiler combination heaters: useful heat output				For boiler space heaters and boiler combination heaters: Useful efficiency			
At rated heat output and high temperature regime (*)	P_4	115.0	kW	At rated heat output and high temperature regime (*)	η_4	87.7	%
At 30% of rated heat output and low temperature regime (**)	P_1	33.3	kW	At 30% of rated heat output and low temperature regime (**)	η_1	96.9	%
Auxiliary electricity consumption				Other items			
At full load	el_{max}	0.190	kW	Standby heat loss	P_{stby}	0.168	kW
At part load	el_{min}	0.025	kW	Ignition burner power consumption	P_{ign}		kW
In standby mode	P_{SB}	0.004	kW	Emissions of nitrogen oxides	NO_X	28	mg / kWh
For combination heaters:							
Declared load profile				Water heating energy efficiency	η_{WH}		%
Daily electricity consumption	Q_{elec}		kWh	Daily fuel consumption	Q_{fuel}		kWh
Contact details	Alpha Therm Ltd., Nepicar House, Wrotham Heath, Kent. TN15 7RS						

(*) High temperature regime means 60°C return temperature at heater inlet and 80°C feed temperature at heater outlet.
(**) Low temperature means for condensing boilers 30°C, for low-temperature boilers 37°C and for other heaters 50°C return temperature.

13.2 PRODUCT DATA SHEET (IN COMPLIANCE WITH REGULATION 811/2013)

Pro Tec Plus 50

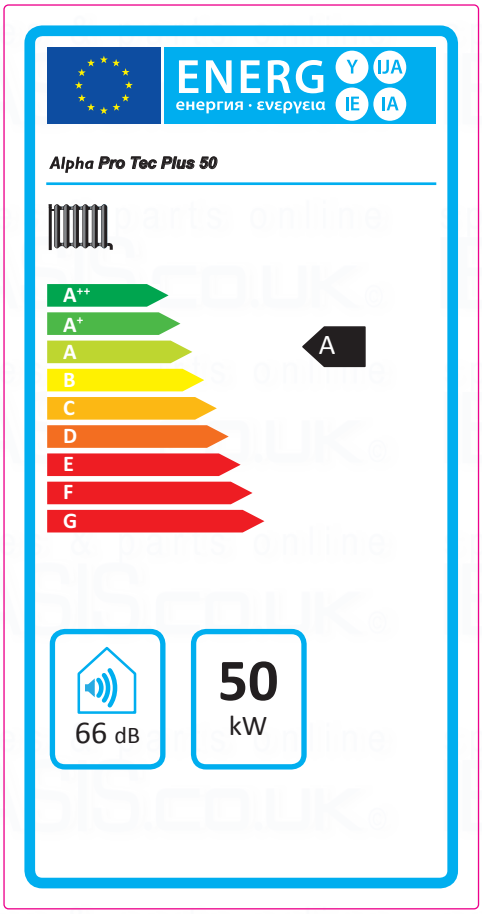

Parameter	value
Yearly energy consumption for the heating function (QHE)	157.0 GJ
Yearly electricity consumption for the domestic hot water function (AEC)	-------
Yearly fuel consumption for the domestic hot water function (AFC)	-------
Seasonal room heating yield (ηs)	92 %
Domestic hot water production yield (ηwh)	-------

Pro Tec Plus 70

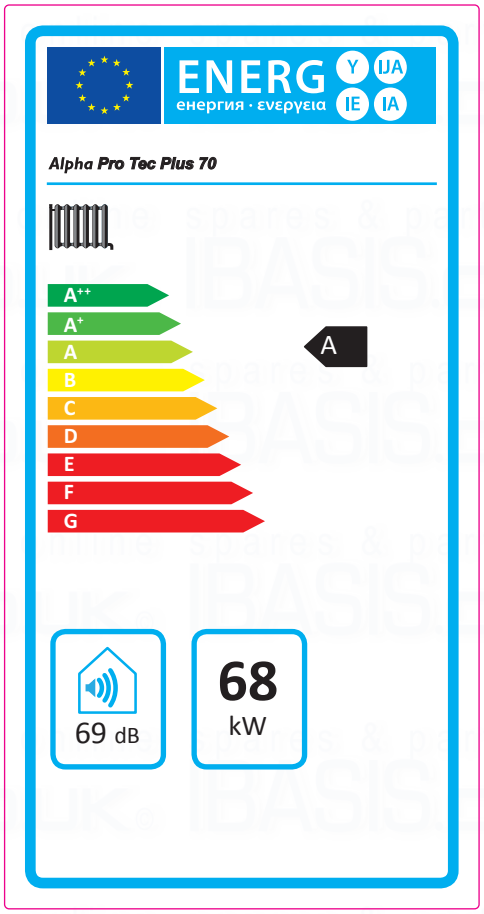

Parameter	value
Yearly energy consumption for the heating function (QHE)	213.5 GJ
Yearly electricity consumption for the domestic hot water function (AEC)	------
Yearly fuel consumption for the domestic hot water function (AFC)	------
Seasonal room heating yield (ηs)	92 %
Domestic hot water production yield (ηwh)	------

13.3 FACSIMILE FOR FILLING IN ROOM HEATING SYSTEM ASSEMBLY CHART

Seasonal space heating energy efficiency of boiler — 1 ‘I’ %

Temperature control
From fiche of temperature control

Class I = 1 %, Class II = 2 %,
Class III = 1.5 %, Class IV = 2 %,
Class V = 3 %, Class VI = 4 %,
Class VII = 3.5 %, Class VIII = 5 %

+ 2 %

Supplementary boiler
From fiche of boiler

Seasonal space heating energy afficiency (in %)

(☐ - ‘I’) x 0,1 = ± 3 %

Solar contribution
From fiche of solar device

Collector size (in m²) — Tank volume (in m³) — Collector efficiency (in %) — Tank rating: A* = 0.95, A = 0.91, B = 0.86, C = 0.83, D-G = 0.81

(‘III’ x ☐ + ‘IV’ x ☐) x (0.9 x (☐ / 100) x ☐ = + 4 %

Supplementary heat pump
From fiche of heat pump

Seasonal space heating energy afficiency (in %)

(☐ - ‘I’) x ‘II’ = + 5 %

Solar contribution AND Supplementary heat pump

Select smaller value

0.5 x 4 O 0.5 x 5 = - 6 %

Seasonal space heating energy efficiency of package — 7 %

Seasonal space heating energy efficiency class of package

G	F	E	D	C	B	A	A+	A++	A+++
< 30 %	≥ 30 %	≥ 34 %	≥ 36 %	≥ 75 %	≥ 82 %	≥ 90 %	≥ 98 %	≥ 125 %	≥ 150 %

Boiler and supplementary heat pump installed with low temperature heat emitters at 35°C?

From fiche of heat pump 7 ☐ + (50 x ‘II’) = ☐ %

The energy efficiency of the package of products provided for in this fiche may not correspond to its actual energy efficiency once installed in a building, as the efficiency is influenced by further factors such as heat loss in the distribution system and the dimensioning of the products in relation to building size and characteristics.

13.3 FACSIMILE FOR FILLING IN ROOM HEATING SYSTEM ASSEMBLY CHART

Seasonal space heating energy efficiency of boiler — 1 ‘I’ %

Temperature control
From fiche of temperature control

Class I = 1 %, Class II = 2 %,
Class III = 1.5 %, Class IV = 2 %,
Class V = 3 %, Class VI = 4 %,
Class VII = 3.5 %, Class VIII = 5 %

+ 2 %

Supplementary boiler
From fiche of boiler

Seasonal space heating energy efficiency (in %)

(☐ - ‘I’) x 0,1 = ± 3 %

Solar contribution
From fiche of solar device

Collector size (in m²) — Tank volume (in m³) — Collector efficiency (in %) — Tank rating: A* = 0.95, A = 0.91, B = 0.86, C = 0.83, D-G = 0.81

(‘III’ x ☐ + ‘IV’ x ☐) x (0.9 x (☐ / 100) x ☐ = + 4 %

Supplementary heat pump
From fiche of heat pump

Seasonal space heating energy efficiency (in %)

(☐ - ‘I’) x ‘II’ = + 5 %

Solar contribution AND Supplementary heat pump

Select smaller value

0.5 x 4 O 0.5 x 5 = - 6 %

Seasonal space heating energy efficiency of package — 7 %

Seasonal space heating energy efficiency class of package

G	F	E	D	C	B	A	A+	A++	A+++
< 30 %	≥ 30 %	≥ 34 %	≥ 36 %	≥ 75 %	≥ 82 %	≥ 90 %	≥ 98 %	≥ 125 %	≥ 150 %

Boiler and supplementary heat pump installed with low temperature heat emitters at 35°C?

From fiche of heat pump

7 + (50 x ‘II’) = ☐ %

The energy efficiency of the package of products provided for in this fiche may not correspond to its actual energy efficiency once installed in a building, as the efficiency is influenced by further factors such as heat loss in the distribution system and the dimensioning of the products in relation to building size and characteristics.

13.4 ROOM HEATING SYSTEM ASSEMBLY CHART

Seasonal space heating energy efficiency of boiler ① ____ %

Temperature control
From fiche of temperature control

Class I = 1 %, Class II = 2 %,
Class III = 1.5 %, Class IV = 2 %,
Class V = 3 %, Class VI = 4 %,
Class VII = 3.5 %, Class VIII = 5 %

② + ____ %

Supplementary boiler
From fiche of boiler

Seasonal space heating energy afficiency (in %)

(____ - _____) x 0,1 = ± ③ ____ %

Solar contribution
From fiche of solar device

Collector size (in m²) | Tank volume (in m³) | Collector efficiency (in %) | Tank rating A* = 0.95, A = 0.91 B = 0.86, C = 0.83 D-G = 0.81

(____ x ____ + ____ x ____) x (0,9 x (____ / 100) x ____ = + ④ ____ %

Supplementary heat pump
From fiche of heat pump

Seasonal space heating energy afficiency (in %)

(____ - _____) x _____ = + ⑤ ____ %

Solar contribution AND Supplementary heat pump

Select smaller value

0.5 x ④ ____ O 0.5 x ⑤ ____ = - ⑥ ____ %

Seasonal space heating energy efficiency of package ⑦ ____ %

Seasonal space heating energy efficiency class of package

G	F	E	D	C	B	A	A+	A++	A+++
< 30 %	≥ 30 %	≥ 34 %	≥ 36 %	≥ 75 %	≥ 82 %	≥ 90 %	≥ 98 %	≥ 125 %	≥ 150 %

Boiler and supplementary heat pump installed with low temperature heat emitters at 35°C?

From fiche of heat pump ⑦ ____ + (50 x _____) = ____ %

The energy efficiency of the package of products provided for in this fiche may not correspond to its actual energy efficiency once installed in a building, as the efficiency is influenced by further factors such as heat loss in the distribution system and the dimensioning of the products in relation to building size and characteristics.

13.5 PARAMETERS FOR FILLING IN ASSEMBLY CHART

Parameter	Pro Tec Plus 50	Pro Tec Plus 70	Pro Tec Plus 90	Pro Tec Plus 115
'I'	92	92	92	92
'II'	*	*	*	*
'III'	0.5445	0.3930	0.2969	0.2407
'IV'	0.2090	0.1537	0.1112	0.0941

* *To be established by means of table 5 of Regulation 811/2013 in case of "assembly" including a heat pump to integrate the boiler. In this case the boiler must be considered as the main appliance of the assembly.*

13.6 DOMESTIC HOT WATER PRODUCTION SYSTEM ASSEMBLY CHART

Water heating energy efficiency of combination heater ❶ ____ %

Declared load profile: ☐

Solar contribution

From fiche of solar device

Auxiliary electricity

(1.1 x ____ - 10 %) x ____ - ____ - ____ = + ❷ ____ %

Water heating energy efficiency of package under average climate ❸ ____ %

Water heating energy efficiency class of package under average climate

	G	F	E	D	C	B	A	A+	A++	A+++
☐ M	< 27 %	≥ 27 %	≥ 30 %	≥ 33 %	≥ 36 %	≥ 39 %	≥ 65 %	≥ 100 %	≥ 130 %	≥ 163 %
☐ L	< 27 %	≥ 27 %	≥ 30 %	≥ 34 %	≥ 37 %	≥ 50 %	≥ 75 %	≥ 115 %	≥ 150 %	≥ 188 %
☐ XL	< 27 %	≥ 27 %	≥ 30 %	≥ 35 %	≥ 38 %	≥ 55 %	≥ 80 %	≥ 123 %	≥ 160 %	≥ 200 %
☐ XXL	< 28 %	≥ 28 %	≥ 32 %	≥ 36 %	≥ 40 %	≥ 60 %	≥ 85 %	≥ 131 %	≥ 170 %	≥ 213 %

Water heating energy efficiency under colder and warmer climate conditions

Colder: ❸ ____ - 0.2 x ❷ ____ = ____ %

Warmer : ❸ ____ + 0.4 x ❷ ____ = ____ %

The energy efficiency of the package of products provided for in this fiche may not correspond to its actual energy efficiency once installed in a building, as the efficiency is influenced by further factors such as heat loss in the distribution system and the dimensioning of the products in relation to building size and characteristics.

13.7 PARAMETERS FOR FILLING IN DHW PACKAGE ASSEMBLY CHART

Parameter	Pro Tec Plus 50	Pro Tec Plus 70	Pro Tec Plus 90	Pro Tec Plus 115
'I'	---	---	---	---
'II'	---	---	---	---
'III'	---	---	---	---
'IV'	---	---	---	---

** To be determined according to Regulation 811/2014 and transient calculation methods as per Notice of the European Community no. 207/2014.*

spares & parts online IBASIS.CO.UK

GAS BOILER SYSTEM COMMISSIONING CHECKLIST

This Commissioning Checklist is to be completed in full by the competent person who commissioned the boiler as a means of demonstrating compliance with the appropriate Building Regulations and then handed to the customer to keep for future reference.

Failure to install and commission according to the manufacturer's instructions and complete this Benchmark Commissioning Checklist will invalidate the warranty. This does not affect the customer's statutory rights.

Customer name:	Telephone number:
Address:	
Boiler make and model:	
Boiler serial number:	
Commissioned by (PRINT NAME):	Gas Safe register number:
Company name:	Telephone number:
Company address:	
	Commissioning date:
To be completed by the customer on receipt of a Building Regulations Compliance Certifcate*	
Building Regulations Notifcation Number (if applicable):	

CONTROLS (tick the appropriate boxes)				
Time and temperature control to heating	Room thermostat and programmer/timer		Programmable room thermostat	
	Load/weather compensation		Optimum start control	
Time and temperature control to hot water	Cylinder thermostat and programmer/timer		Combination Boiler	
Heating zone valves	Fitted		Not required	
Hot water zone valves	Fitted		Not required	
Thermostatic radiator valves	Fitted		Not required	
Automatic bypass to system	Fitted		Not required	
Boiler interlock			Provided	

ALL SYSTEMS				
The system has been fushed and cleaned in accordance with BS7593 and boiler manufacturer's instructions			Yes	
What system cleaner was used?				
What inhibitor was used?			Quantity	litres
Has a primary water system flter been installed?	Yes		No	

CENTRAL HEATING MODE measure and record:				
Gas rate	m³/hr	**OR**	ft³/hr	
Burner operating pressure (if applicable)	mbar	**OR** Gas inlet pressure	mbar	
Central heating fow temperature			°C	
Central heating return temperature			°C	

COMBINATION BOILERS ONLY				
Is the installation in a hard water area (above 200ppm)?	Yes		No	
If yes, and if required by the manufacturer, has a water scale reducer been ftted?	Yes		No	
What type of scale reducer has been ftted?				
DOMESTIC HOT WATER MODE Measure and Record:				
Gas rate	m³/hr	**OR**	ft³/hr	
Burner operating pressure (at maximum rate)	mbar	**OR** Gas inlet pressure at maximum rate	mbar	
Cold water inlet temperature			°C	
Hot water has been checked at all outlets	Yes		Temperature	°C
Water fow rate			l/min	

CONDENSING BOILERS ONLY		
The condensate drain has been installed in accordance with the manufacturer's instructions and/or BS5546/BS6798	Yes	

ALL INSTALLATIONS							
Record the following:	At max. rate:	CO	ppm	**AND**	CO/CO_2	Ratio	
	At min. rate: (where possible)	CO	ppm	**AND**	CO/CO_2	Ratio	
The heating and hot water system complies with the appropriate Building Regulations						Yes	
The boiler and associated products have been installed and commissioned in accordance with the manufacturer's instructions						Yes	
The operation of the boiler and system controls have been demonstrated to and understood by the customer						Yes	
The manufacturer's literature, including Benchmark Checklist and Service Record, has been explained and left with the customer						Yes	

Commissioning Engineer's Signature
Customer's Signature
(To confrm satisfactory demonstration and receipt of manufacturer's literature)

*All installations in England and wales must be notified to Local Authority Building Control (LABC) either directly or through a Competent Persons Scheme. A Building Regulations Compliance Certificate will then be issued to the customer.

benchmark COLLECTIVE MARK
THE MARK OF QUALITY FOR THE INSTALLATION, COMMISSIONING AND SERVICING OF DOMESTIC HEATING AND HOT WATER SYSTEMS

© Heating and Hotwater Industry Council (HHIC)

SERVICE RECORD

It is recommended that your heating system is serviced regularly and that the appropriate Service Interval Record is completed.

Service Provider

Before completing the appropriate Service Record below, please ensure you have carried out the service as described in the manufacturer's instructions. Always use the manufacturer's specifed spare part when replacing controls.

SERVICE 01					Date:
Engineer name:					
Company name:					
Telephone No:					
Gas safe register No:					
Record:	At max. rate:	CO	ppm	**AND**	CO_2 %
	At min. rate: (Where Possible)	CO	ppm	**AND**	CO_2 %
Comments:					
Signature					

SERVICE 02					Date:
Engineer name:					
Company name:					
Telephone No:					
Gas safe register No:					
Record:	At max. rate:	CO	ppm	**AND**	CO_2 %
	At min. rate: (Where Possible)	CO	ppm	**AND**	CO_2 %
Comments:					
Signature					

SERVICE 03					Date:
Engineer name:					
Company name:					
Telephone No:					
Gas safe register No:					
Record:	At max. rate:	CO	ppm	**AND**	CO_2 %
	At min. rate: (Where Possible)	CO	ppm	**AND**	CO_2 %
Comments:					
Signature					

SERVICE 04					Date:
Engineer name:					
Company name:					
Telephone No:					
Gas safe register No:					
Record:	At max. rate:	CO	ppm	**AND**	CO_2 %
	At min. rate: (Where Possible)	CO	ppm	**AND**	CO_2 %
Comments:					
Signature					

SERVICE 05					Date:
Engineer name:					
Company name:					
Telephone No:					
Gas safe register No:					
Record:	At max. rate:	CO	ppm	**AND**	CO_2 %
	At min. rate: (Where Possible)	CO	ppm	**AND**	CO_2 %
Comments:					
Signature					

SERVICE 06					Date:
Engineer name:					
Company name:					
Telephone No:					
Gas safe register No:					
Record:	At max. rate:	CO	ppm	**AND**	CO_2 %
	At min. rate: (Where Possible)	CO	ppm	**AND**	CO_2 %
Comments:					
Signature					

SERVICE 07					Date:
Engineer name:					
Company name:					
Telephone No:					
Gas safe register No:					
Record:	At max. rate:	CO	ppm	**AND**	CO_2 %
	At min. rate: (Where Possible)	CO	ppm	**AND**	CO_2 %
Comments:					
Signature					

SERVICE 08					Date:
Engineer name:					
Company name:					
Telephone No:					
Gas safe register No:					
Record:	At max. rate:	CO	ppm	**AND**	CO_2 %
	At min. rate: (Where Possible)	CO	ppm	**AND**	CO_2 %
Comments:					
Signature					

SERVICE 09					Date:
Engineer name:					
Company name:					
Telephone No:					
Gas safe register No:					
Record:	At max. rate:	CO	ppm	**AND**	CO_2 %
	At min. rate: (Where Possible)	CO	ppm	**AND**	CO_2 %
Comments:					
Signature					

SERVICE 10					Date:
Engineer name:					
Company name:					
Telephone No:					
Gas safe register No:					
Record:	At max. rate:	CO	ppm	**AND**	CO_2 %
	At min. rate: (Where Possible)	CO	ppm	**AND**	CO_2 %
Comments:					
Signature					

*All installations in England and wales must be notified to Local Authority Building Control (LABC) either directly or through a Competent Persons Scheme. A Building Regulations Compliance Certificate will then be issued to the customer.

benchmark COLLECTIVE MARK
THE MARK OF QUALITY FOR THE INSTALLATION, COMMISSIONING AND SERVICING OF DOMESTIC HEATING AND HOT WATER SYSTEMS

© Heating and Hotwater Industry Council (HHIC)

spares & parts online IBASIS.CO.UK

spares & parts online IBASIS.CO.UK

Alpha
HEATING INNOVATION
Alpha Therm Limited.
Nepicar House, London Road, Wrotham Heath,
Sevenoaks, Kent TN15 7RS
Tel: 0870 3001964
email: info@alphatherm.co.uk
website:www.alpha-innovation.co.uk

These instructions have been carefully prepared but we reserve the right to alter the specification at any time in the interest of product improvement.
© Alpha Therm Limited 2015.

Part No. 1.038054 rev. ST.001455/000

Manual compiled and designed by Publications 2000 - Tel: (01670) 356211

04/15/D344